Maintenance
Golf 2004 ➤
Golf Plus 2005 ➤
Edition 11.2009

Protected by copyright. Copying for private or commercial purposes, in part or in whole, is not permitted unless authorised by Volkswagen AG. Volkswagen AG does not guarantee or accept any liability with respect to the correctness of information in this document. Copyright by Volkswagen AG.

Downloaded from www.Manualslib.com manuals search engine

Maintenance

Heading

1. Engine list
2. Service work
3. General
4. Descriptions of work
5. Exhaust emissions test
6. Glossary

Protected by copyright. Copying for private or commercial purposes, in part or in whole, is not permitted unless authorised by Volkswagen AG. Volkswagen AG does not guarantee or accept any liability with respect to the correctness of information in this document. Copyright by Volkswagen AG.

Technical information should always be available to the foremen and mechanics, because their careful and constant adherence to the instructions is essential to ensure vehicle road-worthiness and safety. In addition, the normal basic safety precautions for working on motor vehicles must, as a matter of course, be observed.

All rights reserved.
No reproduction without prior agreement from publisher.

Copyright © 2010 Volkswagen AG, Wolfsburg

K0058991520

Downloaded from www.Manualslib.com manuals search engine

Contents

1	**Engine list**	**1**
2	**Service work**	**7**
2.1	Information on long-life service and time or distance dependent service	7
2.2	Service tables	9
2.3	Delivery inspection	14
2.4	Oil change service	16
2.5	Interval service ‣2007	17
2.6	Interval service 2008‣	18
2.7	Interval service inspection ‣2007	20
2.8	Inspection service 2008‣	22
2.9	Time or distance dependent additional work	25
3	**General**	**29**
3.1	Raising vehicle with lifting platform and trolley jack	29
3.2	Sticker	30
3.3	Entries in service schedule	32
3.4	Connecting vehicle diagnostic tester	32
3.5	Vehicle identification number	34
3.6	Vehicle data sticker	36
3.7	Severe operating conditions	36
3.8	Engine code and engine number	37
3.9	RME fuel (biodiesel) for vehicles up to 05.2006	37
3.10	Type plate	38
4	**Descriptions of work**	**39**
4.1	Removable towing bracket: Check and clean if necessary	41
4.2	Swivel joints: Visual check	43
4.3	Driving light assist and cornering light: Check function	43
4.4	Automatic gearbox: Check ATF level, 09G gearbox	44
4.5	Automatic gearbox: Change ATF (09G gearbox)	44
4.6	Battery: Check battery terminal clamps for secure seating	45
4.7	Battery: Check using battery tester with printer VAS 5097A or VAS 6161	48
4.8	Checking tyres: Condition, wear pattern, tyre pressure, tread depth and age of tyres	48
4.9	Brake and clutch system: Change brake fluid	53
4.10	Brake fluid level: Check	57
4.11	Brake system and shock absorbers: Perform visual check for leaks and damage	58
4.12	Front and rear brake pads/linings: Check thickness	59
4.13	Checking diesel particulate filter	60
4.14	6-speed dual clutch gearbox (DSG) 02E: Change oil and filter	61
4.15	Electric windows: Check positioning (open and close functions)	61
4.16	Vehicle system test: Perform test	62
4.17	Front passenger front airbag: Check key switch and “On/Off function”	63
4.18	Protective bellows: Visual check	65
4.19	Haldex coupling (Golf 4motion): Change oil	66
4.20	Poly V-belt: Adjust tension on engines without automatic tensioning roller	69
4.21	Poly V-belt: Check condition	70
4.22	Calibrating compass (for North American region)	71
4.23	Cooling system: Check frost protection and coolant level	72
4.24	Fuel filter: Renew	74
4.25	Air filter: Clean housing and renew filter element	80
4.26	Engine cover -top-: Removing and installing	89
4.27	Removing and installing engine compartment cover -bottom- (noise insulation)	99
4.28	Engine and components in engine compartment (from above and below): Perform visual check for leaks and damage	100
4.29	Engine oil level: Check	101

Copyright by Volkswagen AG. Volkswagen AG does not guarantee or accept any liability with respect to the correctness of information in this document.

Downloaded from www.Manualslib.com manuals search engine

4.30 Engine oil: Drain or extract; renew oil filter and replenish engine oil . . . 101
4.31 Performing road test (driving behaviour, noises, air conditioner etc.) . . . 112
4.32 Wheel securing bolts: Tighten to prescribed torque setting . . . 112
4.33 Reading radio code using vehicle diagnostic tester . . . 114
4.34 Radio/radio navigation system: Enter PIN of anti-theft coding and store local radio stations to station buttons . . . 115
4.35 Tyre pressure monitoring: Perform basic setting . . . 116
4.36 Tyre repair set: Check bottle for damage and if used; check and enter date of tyre sealant . . . 118
4.37 Dust and pollen filter: Clean housing and renew filter element . . . 118
4.38 Headlight adjustment: Check . . . 119
4.39 Service interval display: Reset . . . 126
4.40 Service interval display: Recode . . . 127
4.41 Sunroof: Check function, clean and grease guide rails . . . 129
4.42 Sliding sunroof drains: Check flow and clean if necessary . . . 129
4.43 Window wash/wipe system and headlight washer system: Check function . . . 131
4.44 Wiper blade protection: Remove . . . 137
4.45 Wiper blades: Check park position . . . 139
4.46 Track rod ends: Check play, security and boots . . . 140
4.47 Auxiliary heater: Set weekday in menu of combi-instrument . . . 140
4.48 Door arrester: Grease . . . 141
4.49 Transportation mode: Switch off . . . 141
4.50 Transportation devices: Remove blocking pieces from front axle springs . . . 143
4.51 Underbody: Visual check for damage to underbody sealant, underbody panels, routing of lines, plugs etc. . . . 143
4.52 Clock and date: Set to correct time . . . 144
4.53 Toothed belt and toothed belt tensioning roller: Renew (TDI unit injector) . . . 145
4.54 Camshaft drive toothed belt: Renew (only 2.0 l FSI and TFSI) . . . 145
4.55 Camshaft drive toothed belt: Check (4-cylinder petrol engines 1.4 l 55 kW and 1.6 l 75 kW) . . . 145
4.56 Spark plugs: Renew . . . 146
4.57 Front and rear final drive: Check oil level . . . 159
5 Exhaust emissions test . . . 160
5.1 Exhaust emissions test for petrol engines . . . 160
5.2 Exhaust emissions test for diesel engines without OBD . . . 167
5.3 Exhaust emissions test for diesel engines with OBD . . . 171
6 Glossary . . . 180

Volkswagen AG. Volkswagen AG does not guarantee or accept any liability with respect to the correctness of information in this document. Copyright by Volkswagen AG.

Downloaded from www.Manualslib.com manuals search engine

1 Engine list

In this chapter you will obtain information for

- Petrol engines ⇒ page 1
- Diesel engines ⇒ page 5

Note

To ease the search for an engine, the engine codes are listed in alphabetical order.

Petrol engines

Engines: ⇒	Petrol engine	Petrol engine	Petrol engine
Capacity l	2.0	2.0	1.6
Engine code	**AXW**	**AXX**	**BAG**
No. of cylinders/valves per cylinder	4/4	4/4	4/4
Output kW at rpm	110/6000	147/5700	85/6000
Torque Nm at rpm	200/3500	280/2000	155/4000
Bore ∅ mm	82.5	82.5	76.5
Stroke mm	92.8	92.8	86.9
Compression ratio	11.5	10.5	11.5
Injection/ignition	Motronic MED 9.5.10 FSI	Motronic MED 9.1 TFSI	Motronic MED 9.5.10 FSI
RON Petrol unleaded, at least	95	95	95
Camshaft drive	Toothed belt	Toothed belt	Chain

Engines: ⇒	Petrol engine	Petrol engine	Petrol engine
Capacity l	1.4	2.5	2.5
Engine code	**BCA**	**BGP**	**BGQ**
No. of cylinders/valves per cylinder	4/4	5/4	5/4
Output kW at rpm	55/5000	110/5000	110/5000
Torque Nm at rpm	126/3300	228/3750	228/3750
Bore ∅ mm	76.5	82.5	82.5
Stroke mm	75.6	92.8	92.8
Compression ratio	10.5	10	10
Injection/ignition	Motronic MED 7.5.10 SRE	Motronic ME 7.1.1 SRE	Motronic ME 7.1.1 SRE
RON Petrol unleaded, at least	95[1]	91	91
Camshaft drive	Toothed belt	Chain	Chain

1) 91 RON also permitted, but reduced output

Copyright by Volkswagen AG. Volkswagen AG does not guarantee or assume any liability with respect to the correctness of information in this document. Copying for private or commercial purposes, in part or in whole, is not permitted unless authorised by Volkswagen AG. Protected by copyright.

Downloaded from www.Manualslib.com manuals search engine

Engines: ⇒	Petrol engine	Petrol engine	Petrol engine
Capacity l	1.6	1.4	1.6
Engine code	**BGU**	**BKG**	**BLF**
No. of cylinders/valves per cylinder	4/2	4/4	4/4
Output kW at rpm	75/5600	66/5000	85/5800
Torque Nm at rpm	148/3800	130/3750	155/4000
Bore ∅ mm	81.0	76.5	76.5
Stroke mm	77.4	75.6	86.9
Compression ratio	10.5	12.0	12.0
Injection/ignition	Simos 7.1 SRE	Motronic MED 9.5.10 FSI	Motronic MED 9.5.10 FSI
RON Petrol unleaded, at least	95[1]	95[1]	95
Camshaft drive	Toothed belt	Chain	Chain

1) 91 RON also permitted, but reduced output

Engines: ⇒	Petrol engine	Petrol engine	Petrol engine
Capacity l	1.4	1.4	1.6
Engine code	**BLG**	**BLN**	**BLP**
No. of cylinders/valves per cylinder	4/4	4/4	4/4
Output kW at rpm	125/6000	66/5000	85/5800
Torque Nm at rpm	240/1750	130/3750	155/4000
Bore ∅ mm	76.5	76.5	76.5
Stroke mm	75.6	75.6	86.9
Compression ratio	9.7	12.0	12.0
Injection/ignition	Motronic MED 9.5.10 or 17.5.1 TSI	Motronic MED 9.5.10 FSI	Motronic MED 9.5.10 FSI
RON Petrol unleaded, at least	95	95[1]	95
Camshaft drive	Chain	Chain	Chain

1) 91 RON also permitted, but reduced output

Engines: ⇒	Petrol engine	Petrol engine	Petrol engine
Capacity l	2.0	2.0	2.0
Engine code	**BLR**	**BLX**	**BLY**
No. of cylinders/valves per cylinder	4/4	4/4	4/4
Output kW at rpm	110/6000	110/6000	110/6000
Torque Nm at rpm	200/3500	200/3500	200/3500
Bore ∅ mm	82.5	82.5	82.5
Stroke mm	92.8	92.8	92.8
Compression ratio	11.5	11.5	11.5
Injection/ignition	Motronic MED 9.5.10 FSI	Motronic MED 9.5.10 FSI	Motronic MED 9.5.10 FSI
RON Petrol unleaded, at least	95	95	95

Protected by copyright. Copying for private or commercial purposes, in part or in whole, is not permitted unless authorised by Volkswagen AG. Volkswagen AG does not guarantee or accept any liability with respect to the correctness of information in this document. Copyright by Volkswagen AG.

Downloaded from www.Manualslib.com manuals search engine

Engines: ⇒	Petrol engine	Petrol engine	Petrol engine
Capacity l	2.0	2.0	2.0
Engine code	**BLR**	**BLX**	**BLY**
Camshaft drive	Toothed belt	Toothed belt	Toothed belt

Engines: ⇒	Petrol engine	Petrol engine	Petrol engine
Capacity l	1.4	2.0	1.6
Engine code	**BMY**	**BPY**	**BSE**
No. of cylinders/valves per cylinder	4/4	4/4	4/2
Output kW at rpm	103/5600	147/5700	75/5600
Torque Nm at rpm	220/2000...4000	280/2000	148/3800
Bore ∅ mm	76.5	82.5	81.0
Stroke mm	75.6	92.8	77.4
Compression ratio	10	10.5	10.5
Injection/ignition	Motronic MED 17.5.1 TSI	Motronic MED 9.1 TFSI	Simos 7.1 SRE
RON Petrol unleaded, at least	95	95	95[1]
Camshaft drive	Chain	Toothed belt	Toothed belt

1) 91 RON also permitted, but reduced output

Engines: ⇒	Petrol engine	Petrol engine	Petrol engine
Capacity l	1.6	3.2	1.4
Engine code	**BSF**	**BUB**	**BUD**
No. of cylinders/valves per cylinder	4/2	6/4	4/4
Output kW at rpm	75/5600	184/6300	59/5000
Torque Nm at rpm	148/3800	320/ 2500...3000	130/4200
Bore ∅ mm	81.0	84	76.5
Stroke mm	77.4	95.9	75.6
Compression ratio	10.5	11.3	10.5
Injection/ignition	Simos 7.1 SRE	Motronic ME 7.1.1 SRE	Magneti Marelli 4HV SRE
RON Petrol unleaded, at least	95 [1]	95	95[1]
Camshaft drive	Toothed belt	Chain	Toothed belt

1) 91 RON also permitted, but reduced output

Engines: ⇒	Petrol engine	Petrol engine	Petrol engine
Capacity l	2.0	2.0	2.0
Engine code	**BVX**	**BVY**	**BVZ**
No. of cylinders/valves per cylinder	4/4	4/4	4/4
Output kW at rpm	110/6000	110/6000	110/6000
Torque Nm at rpm	200/3500	200/3500	200/3500
Bore ∅ mm	82.5	82.5	82.5
Stroke mm	92.8	92.8	92.8

Protected by copyright. Copying for private or commercial purposes, in part or in whole, is not permitted unless authorised by Volkswagen AG. Volkswagen AG does not guarantee or accept any liability with respect to the correctness of information in this document. Copyright by Volkswagen AG.

Downloaded from www.Manualslib.com manuals search engine

Engines: ⇒	Petrol engine	Petrol engine	Petrol engine
Capacity l	2.0	2.0	2.0
Engine code	**BVX**	**BVY**	**BVZ**
Compression ratio	11.5	11.5	11.5
Injection/ignition	Motronic MED 9.5.10 FSI	Motronic MED 9.5.10 FSI	Motronic MED 9.5.10 FSI
RON Petrol unleaded, at least	95	95	95
Camshaft drive	Toothed belt	Toothed belt	Toothed belt

Engines: ⇒	Petrol engine	Petrol engine	Petrol engine	Petrol engine
Capacity l	2.0	2.0	1.4	2.0
Engine code	**BWA**	**BYD**	**CAVD**	**CAWB**
No. of cylinders/valves per cylinder	4/4	4/4	4/4	4/4
Output kW at rpm	147/5100...6000	169/5500…6300	118/6000	147/5100...6000
Torque Nm at rpm	280/1800...5000	300/2200…5200	240/1750...4500	280/1700...5000
Bore ∅ mm	82.5	82.5	76.5	82.5
Stroke mm	92.8	92.8	75.6	92.8
Compression ratio	10.3	10.3	9.7	10.3
Injection/ignition	Motronic MED 9.1 TFSI	Motronic MED 9.1 TFSI	Motronic MED17.5.5 TSI twincharger	Motronic MED 17.5 TSI turbocharger
RON Petrol unleaded, at least	95	98[2]	98[2]	95
Camshaft drive	Toothed belt	Toothed belt	Chain	Chain

2) 95 RON also permitted, but reduced output

Engines: ⇒	Petrol engine	Petrol engine	Petrol engine	Petrol engine
Capacity l	1.4	2.0	3.2	2.5
Engine code	**CAXA**	**CBFA**	**CBRA**	**CBTA**
No. of cylinders/valves per cylinder	4/4	4/4	6/4	5/4
Output kW at rpm	90/5000	147/5100...6000	184/6300	125/5000
Torque Nm at rpm	200/1500...4000	280/1700...5000	320/2500…3000	240/4250
Bore ∅ mm	76.5	82.5	84	82.5
Stroke mm	75.6	92.8	95.9	92.8
Compression ratio	9.7	10.3	10.85	10.0
Injection/ignition	Motronic MED 17 TSI turbocharger	Motronic MED 17.1 TSI turbocharger	Motronic ME 7.1.1 SRE	Motronic ME 7.1.1 or 17.5 SRE
RON Petrol unleaded, at least	95	95	98[2]	91
Camshaft drive	Chain	Chain	Chain	Chain

2) 95 RON also permitted, but reduced output

Protected by copyright. Copyright by Volkswagen AG. Volkswagen AG does not guarantee or accept any liability with respect to the correctness of information in this document. Copying for private or commercial purposes, in part or in whole, is not permitted unless authorised by Volkswagen AG.

Downloaded from www.Manualslib.com manuals search engine

Protected by copyright. Copying for private or commercial purposes, in part or in whole, is not permitted unless authorised by Volkswagen AG. Volkswagen AG does not guarantee or accept any liability with respect to the correctness of information in this document. Copyright by Volkswagen AG.

Engines: ⇒	Petrol engine	Petrol engine Flex Fuel	Petrol engine
Capacity l	2.5	1.6	2.0
Engine code	**CBUA**	**CCSA**	**CCTA**
No. of cylinders/valves per cylinder	5/4	4/2	4/4
Output kW at rpm	125/5000	75/5600	147/5100...6000
Torque Nm at rpm	240/4250	148/3800	280/1700...5000
Bore ∅ mm	82.5	81.0	82.5
Stroke mm	92.8	77.4	92.8
Compression ratio	10.0	10.5	9.6
Injection/ignition	Motronic ME 7.1.1 or 17.5 SRE	Simos 7.1 SRE	Motronic MED 17.5 TSI turbocharger
RON Petrol unleaded, at least	91	95[1]	95
RON Ethanol E85	---	104	---
Camshaft drive	Chain	Toothed belt	Chain

1) 91 RON also permitted, but reduced output

2) 95 RON also permitted, but reduced output

Diesel engines

Engines: ⇒	Diesel engine	Diesel engine	Diesel engine
Capacity l	2.0	2.0	2.0
Engine code	**AZV**	**BDK**	**BEE**
No. of cylinders/valves per cylinder	4/4	4/2	4/4
Output kW at rpm	103/4000	55/4200	96/4200
Torque Nm at rpm	320/1750...2500	140/2200...2400	320/1750...3750
Bore ∅ mm	81.0	81.0	81.0
Stroke mm	95.5	95.5	95.5
Compression ratio	18.5	19.0	18.5
Injection/ignition	TDI unit injector	SDI unit injector	TDI unit injector
Diesel particulate filter	no	no	no
Camshaft drive	Toothed belt	Toothed belt	Toothed belt

Engines: ⇒	Diesel engine	Diesel engine	Diesel engine
Capacity l	1.9	1.9	2.0
Engine code	**BJB**	**BKC**	**BKD**
No. of cylinders/valves per cylinder	4/2	4/2	4/4
Output kW at rpm	77/4000	77/4000	103/4000
Torque Nm at rpm	250/1900	250/1900	320/1750...2500
Bore ∅ mm	79.5	79.5	81.0
Stroke mm	95.5	95.5	95.5
Compression ratio	19.0	19.0	18.5
Injection/ignition	TDI unit injector	TDI unit injector	TDI unit injector

Downloaded from www.Manualslib.com manuals search engine

Engines: ⇒	Diesel engine	Diesel engine	Diesel engine
Capacity l	1.9	1.9	2.0
Engine code	**BJB**	**BKC**	**BKD**
Diesel particulate filter	no	no	no
Camshaft drive	Toothed belt	Toothed belt	Toothed belt

Engines: ⇒	Diesel engine	Diesel engine	Diesel engine	Diesel engine
Capacity l	1.9	2.0	2.0	1.9
Engine code	**BLS**	**BMM**	**BMN**	**BRU**
No. of cylinders/valves per cylinder	4/2	4/2	4/4	4/2
Output kW at rpm	77/4000	103/4000	125/4200	66/4000
Torque Nm at rpm	250/1900	320/1750...2500	350/1800...2500	210/1800...2500
Bore ∅ mm	79.5	81.0	81.0	79.5
Stroke mm	95.5	95.5	95.5	95.5
Compression ratio	19.0	18.5	18.5	19.0
Injection/ignition	TDI unit injector	TDI unit injector	TDI unit injector	TDI unit injector
Diesel particulate filter	yes	yes	yes	no
Camshaft drive	Toothed belt	Toothed belt	Toothed belt	Toothed belt

Engines: ⇒	Diesel engine	Diesel engine	Diesel engine	Diesel engine
Capacity l	2.0	1.9	1.9	1.9
Engine code	**BVB**	**BXE**	**BXF**	**BXJ**
No. of cylinders/valves per cylinder	4/2	4/2	4/2	4/2
Output kW at rpm	96/4200	77/4000	66/4000	66/4000
Torque Nm at rpm	320/1750...3750	250/1900	210/1800	210/1800...2500
Bore ∅ mm	81.0	79.5	79.5	79.5
Stroke mm	95.5	95.5	95.5	95.5
Compression ratio	18.5	18.5	19.0	19.0
Injection/ignition	TDI unit injector	TDI unit injector	TDI unit injector	TDI unit injector
Diesel particulate filter	yes	no	no	yes
Camshaft drive	Toothed belt	Toothed belt	Toothed belt	Toothed belt

Protected by copyright. Copying for private or commercial purposes, in part or in whole, is not permitted unless authorised by Volkswagen AG. Volkswagen AG does not guarantee or accept any liability with respect to the correctness of information in this document. Copyright by Volkswagen AG

Downloaded from www.Manualslib.com manuals search engine

2 Service work

In this chapter you will obtain information on the following subjects:

Information on long-life service and time or distance dependent service ⇒ page 7

Service tables ⇒ page 9

Delivery inspection ⇒ page 14

Oil change service ⇒ page 16

Interval service ‣2007 ⇒ page 17

Interval service 2008‣ ⇒ page 18

Interval service inspection ‣2007 ⇒ page 20

Inspection service 2008‣ ⇒ page 22

Time or distance dependent additional work ⇒ page 25

2.1 Information on long-life service and time or distance dependent service

Service identification ⇒ page 7

Long-life service ⇒ page 7

Time or distance dependent service ⇒ page 8

Service interval display ⇒ page 8

2.1.1 Service identification

– Check vehicle data sticker ⇒ page 36 to determine whether the vehicle is equipped with PR number “QG0”, “QG1” or “QG2”. The PR number is decisive for the service intervals ⇒ page 10 .

Vehicle IDs with the following PR number

“QG1” indicates long-life service

“QG0” or “QG2” indicates time or distance dependent service

2.1.2 Long-life service

Vehicles with PR number “QG1”

The long-life service enables long service intervals, depending on individual driving style and the conditions under which the vehicle is used.

Note

For the long-life service a special long-life engine oil is required ⇒ page 11

Vehicles with PR number “QG1” are fitted at the factory with active long-life service. This means, these vehicles have a flexible service interval display and are fitted with the following components:

- Flexible service interval display in dash panel insert
- Engine oil level sensor
- Brake pad wear indicator (if fitted)

Protected by copyright. Copying for private or commercial purposes, in part or in whole, is not permitted unless authorised by Volkswagen AG. Volkswagen AG does not guarantee or accept any liability with respect to the correctness of information in this document. Copyright by Volkswagen AG.

Downloaded from www.Manualslib.com manuals search engine

For vehicles with long-life service the service interval is determined by the control unit and is indicated on service interval display (SID) ⇒ page 8 .

Therefore the service intervals for long-life service are flexible.

These flexible service intervals are valid for all types of service including an engine oil change.

2.1.3 Time or distance dependent service

For vehicles with time or distance dependent service with PR number “QG0/QG2” the non-flexible service intervals are set by Volkswagen according to predetermined mileage or time values. For normal operating conditions achieving these service intervals is technically assured.

Therefore the service intervals for time or distance dependent service are non-flexible.

For vehicles

- Which were delivered without extended servicing intervals (ESI) (PR number “QG0” = without ESI, PR number “QG2” = ESI cannot be activated)
- When the extended servicing interval (ESI) was stopped
- When no long-life engine oil was used

The time or distance dependent service is valid.

These non-flexible service intervals are valid for all types of service including an engine oil change.

Vehicles with PR number “QG0”

Vehicles are “not” fitted at the factory with components for long-life service. For maintenance the time or distance dependent intervals (non-flexible intervals) are valid.

Vehicles with PR number “QG2”

For these vehicles the long-life service is not active at the factory. Therefore, these vehicles have a non-flexible service interval display (SID) ⇒ page 8 and for maintenance the time or distance dependent intervals (non-flexible intervals) are valid. These vehicles are fitted with the following components:

- Non-flexible service interval display in dash panel insert
- Engine oil level sensor
- Brake pad wear indicator (if fitted)

2.1.4 Service interval display

Introduction of extended servicing intervals (ESI) ⇒ page 8

Flexible service interval display (only vehicles with long-life service, PR number QG1) ⇒ page 8

Non-flexible service interval display (only vehicles with time or distance dependent service, PR number “QG0/QG2)” ⇒ page 9

Service interval display: Reset ⇒ page 126

Service interval display: Recode ⇒ page 127

Introduction of extended servicing intervals (ESI)

Ask your importer if the extended servicing interval (ESI) is available for your country.

Protected by copyright. Copyright by Volkswagen AG. Volkswagen AG does not guarantee or accept any liability with respect to the correctness of information in this document. Copyright by Volkswagen AG.

Downloaded from www.Manualslib.com manuals search engine

Flexible service interval display (only vehicles with long-life service, PR number QG1)

Calculation of service intervals:

- To calculate the service intervals for vehicles with long-life service, input values such as distance driven, fuel consumption, oil temperature and load of diesel particulate filter are evaluated.
- The result of the evaluation is a measure of the deterioration of the oil due to thermal load.
- Oil deterioration is the decisive factor in determining the distance that can still be driven before the next service.

Note

For vehicles with long-life service (PR number QG1) but which are serviced according to time or distance dependent service, the service interval display must be recoded to "non-flexible" *⇒ page 127* *.*

Non-flexible service interval display (only vehicles with time or distance dependent service, PR number "QG0/QG2)"

Calculation of service intervals:

- To calculate the service interval for vehicles with time or distance dependent service the non-flexible service intervals are set by Volkswagen according to predetermined mileage or time values.
- For normal operating conditions achieving these service intervals is technically assured.

2.2 Service tables

Service intervals ⇒ page 10 .

VW engine oil standards ⇒ page 11

Filter change intervals ⇒ page 12

Toothed belt change intervals ⇒ page 12

Spark plug change intervals ⇒ page 13

Note

- *For combined kilometre and time display applies: whichever occurs first.*
- *Depending on conditions under which the vehicle is used* *⇒ page 36* *and vehicle equipment, extra service work must be performed in addition to the interval service, inspection service or interval service inspection.*
- *It is also possible, to perform additional work outside the service intervals with regard to the entries in the service schedule (or sticker: your next service).*

Protected by copyright. Copyright by Volkswagen AG. Volkswagen AG does not guarantee or accept any liability with respect to the correctness of information in this document. Copyright by Volkswagen AG.

Downloaded from www.Manualslib.com manuals search engine

2.2.1 Service intervals

Caution

Only valid for diesel engines:

- *In some countries the sulphur content in diesel fuel exceeds 2000 ppm.*
- *The high sulphur content leads to excessive wear of cylinders and it considerably reduces the cleanliness of pistons.*

◆ *Therefore, in countries with elevated sulphur content in diesel fuel, change engine oil and fuel filter every 7,500 km.*

◆ *Your importer will inform you about countries with elevated sulphur content in diesel fuel.*

Protected by copyright. Copying for private or commercial purposes, in part or in whole, is not permitted unless authorised by Volkswagen AG. Volkswagen AG does not guarantee or accept any liability with respect to the correctness of information in this document. Copyright by Volkswagen AG.

Note

◆ *For extremely uneconomical driving style or use under extreme conditions* *⇒ page 36* *, the shortest interval for an oil change service or interval service is "15,000 km or 1 year".*

◆ *However, for some countries other intervals are valid. Your importer will inform you about this.*

Golf/Golf Plus			
Service intervals ▸2007			
From - to	**Engine/Engine code/ PR No./Remarks**	**Service/intervals**	**Indicated on service interval display SID (includes oil change)**
Since introduction ▸2007	QG0/QG2/QG3 or QG1 vehicles coded to non-flexible interval	Oil change service: every 15,000 km or 1 year	YES
		Interval service: every 30,000 km or 2 years	YES
	QG1 vehicles	Interval service: flexible from 15,000 to max. 30,000 km or max. 2 years	YES
	All vehicles	Interval service inspection: every 60,000 km or 4 years	YES

Note

For combined kilometre and time display applies: whichever occurs first.

Downloaded from www.Manualslib.com manuals search engine

Golf/Golf Plus			
Service intervals 2008 ▸			
From - to	**Engine/Engine code/ PR No./Remarks**	**Service/intervals**	**Indicated on service interval display SID (includes oil change)**
2008 ▸	QG0/QG2/QG3 or QG1 vehicles coded to non-flexible interval	Oil change service every 15,000 km or 1 year	YES
		Interval service: every 30,000 km or 2 years	YES
	QG1 vehicles	Interval service: from 15,000 km or 1 year up to max. 30,000 km or 2 years	YES
	All vehicles	Inspection service: after 3 years or max 60,000 km, then every 2 years	NO

2.2.2 VW engine oil standards

Caution

Only engine oils approved by VW may be used, up-to-date information ⇒ ServiceNet, Technical information, Inspections and Servicing, Approved oils .

Golf/Golf Plus			
VW ENGINE OIL STANDARDS			
With long-life service (QG1)		Without long-life service (QG0, QG2)	
PETROL ENGINES			
4-cylinder engines, 5-cylinder engines, VR6 engines without FSI	504 00[1] alternative 503 00 [2]	4-cylinder engines, 5-cylinder engines ▸2007	501 01/502 00
		4-cylinder engines, 5-cylinder engines 2008 ▸	502 00
R4 TSI engines	504 00[1)] alternative 503 00	R4 TSI engines, VR6 engines without FSI ▸2007	502 00/505 01
		R4 TSI engines, VR6 engines without FSI 2008 ▸	502 00
DIESEL ENGINES			
Unit injector engines without diesel particulate filter	507 00[1] alternative 506 01 [3]	Unit injector engines without diesel particulate filter	505 01
Unit injector engines with diesel particulate filter[4]	507 00[1]	Unit injector engines with diesel particulate filter[4]	507 00[1]

1) Combination product: 504 00/507 00

2) Combination product: 503 00/506 00

3) Combination product: 503 00/506 00/506 01

4) Vehicles with diesel particulate filter (fitted at the factory) can be identified by PR No. 7GG, 7MB, 7MG or 7GA on the vehicle data sticker.

Copyright by Volkswagen AG. Volkswagen AG does not guarantee or accept any liability with respect to the correctness of information in this document. Copyright by Volkswagen AG. Copying for private or commercial purposes, in part or in whole, is not permitted unless authorized by Volkswagen AG.

Downloaded from www.Manualslib.com manuals search engine

Note

Vehicles with retrofitted diesel particulate filter are allocated in the table to diesel engines without diesel particulate filter.

2.2.3 Filter change intervals

Golf/Golf Plus			
FILTER CHANGE INTERVALS			
ENGINE OIL FILTER[1) 2)]			
Vehicles with long-life service (QG1)	According to service interval display		
All remaining vehicles	Every 15,000 km or 1 year		
AIR FILTER			
All engine types except GTI “Edition 30” and GTI “Pirelli”	Every 90,000 km or 6 years		
Only GTI “Edition 30” and GTI “Pirelli”	Every 60,000 km		
FUEL FILTER			
All diesel engines	Diesel conforming to EN 590	Diesel not conforming to EN 590	Biodiesel (RME) for vehicles up to 05.2006
	Every 90,000 km	Every 30,000 km	Every 30,000 km
	Draining water is deleted		
DUST AND POLLEN FILTER			
All engine types	Every 60,000 km or 2 years		
OIL FILTER OF DUAL CLUTCH GEARBOX (DSG)			
All with gearbox type 02E	Every 60,000 km		

[1)]A new engine oil filter must be installed at every engine oil change.

[2)]Only valid for diesel engines: In some countries the sulphur content in diesel fuel exceeds 2000 ppm. The high sulphur content leads to excessive wear of cylinders and it considerably reduces the cleanliness of pistons. Therefore, in countries with elevated sulphur content in diesel fuel, change engine oil and fuel filter every 7,500 km. Your importer will inform you about countries with elevated sulphur content in diesel fuel.

2.2.4 Toothed belt change intervals

- If the engine is fitted with toothed belt or timing chain can be found in the engine list.

Note

The camshaft drive with timing chain is maintenance-free!

Golf/Golf Plus				
TOOTHED BELT CHANGE INTERVALS, TENSIONING ROLLER CHANGE INTERVALS				
DIESEL ENGINES				
Engine type	Engine code	Model year	Change interval	Tensioning roller

Protected by copyright. Copying for private or commercial purposes, in part or in whole, is not permitted unless authorised by Volkswagen AG. Volkswagen AG does not guarantee or accept any liability with respect to the correctness of information in this document.

Downloaded from www.Manualslib.com manuals search engine

Golf/Golf Plus				
TOOTHED BELT CHANGE INTERVALS, TENSIONING ROLLER CHANGE INTERVALS				
SDI-PD	BDK	Since introduction	Every 120,000 km	Every 240,000 km
TDI-PD	AZV, BEE, BJB, BKD, BKC, BXE, BXF, BXJ BRU, BLS, BMM, BMN, BVB	Since introduction ‣2006	Every 120,000 km	‣2006 Every 240,000 km
TDI-PD	AZV, BEE, BJB, BKD, BKC, BXE, BXF, BXJ BRU, BLS, BMM, BMN, BVB	2007‣	Every 150,000 km	2007‣ Every 300,000 km
PETROL ENGINES				
2.0 l	AXW, BLX, BLY, BLR, BVX ,BVY, BVZ, AXX, BPY, BWA, BYD	Since introduction	Every 180,000 km	---
1.4 l 1.6 l	BCA, BUD BSE, BSF, BGU, CCSA	Since introduction	No prescribed change interval, toothed belt drive with test interval, see time and/or distance dependent additional work ⇒ page 25	

Note

As of model year 2008 4-digit engine codes will be introduced. The first 3 digits show the design of engine and are stamped on the engine as previously. The fourth digit shows the engine output and varies according to engine control unit. The four-digit engine code can be found on the type plate, the vehicle data sticker and on the engine control unit.

2.2.5 Spark plug change intervals

- Spark plug designation and specified torque: Power unit ⇒ Rep. Gr. 28 → Repairing ignition system → Test data.

Note

For technical reasons it is possible that several cross references are not directed to the correct chapter. In this case select the procedure manually in the information.

Golf/Golf Plus		
Spark plug change intervals		
Engine type	Engine code	Change intervals
All except 1.8 TSI, 2.0 TSI; 2.0 TFSI and V6 FSI	AXW, BAG, BCA, BGP, BGQ, BGU, BKG, BLF, BLG, BLN, BLP, BLR, BLX, BLY, BMY, BSE, BSF, BUB, BUD, BVX, BVY, BVZ, CAXA, CBTA, CBUA, CCSA	EVERY 60,000 km • Mileage more than 60,000 km in 4 years
		EVERY 4 years • Mileage less than 60,000 km in 4 years

Downloaded from www.Manualslib.com manuals search engine

Golf/Golf Plus		
Spark plug change intervals		
1.8 TSI, 2.0 TSI; 2.0 TFSI and V6 FSI	AXX, BPY, BWA, BYD, CAVD, CAWB, CBFA, CBRA, CCTA	EVERY 90,000 km • Mileage more than 90,000 km in 6 years
		EVERY 6 years • Mileage less than 90,000 km in 6 years

2.3 Delivery inspection

- The sequence of the individual service tasks has been tested and optimised. Therefore, it should be followed to avoid unnecessary interruptions in the work.
- For stock vehicles and vehicles in storage perform service for stock vehicles and vehicles in storage “Maintenance tables”.

Work to be completed	Page
– Battery: Check battery terminals by hand for tightness	⇒ page 45
– Battery: Check using battery tester with printer -VAS 5097A-	⇒ page 48
– Transportation mode: Switch off	⇒ page 141
– Service interval display: Reset • Only valid for stock vehicles and vehicles in storage	⇒ page 126
– Reading radio code using vehicle diagnostic tester	⇒ page 114
– Radio/radio navigation system: Enter PIN of anti-theft coding and store local radio stations to station buttons	⇒ page 115
– All switches, electrical consumers, gauges and other controls: Check function	
– Clock: Set to correct time	⇒ page 144
– Front passenger front airbag: Check key switch and “On/Off function”, set switch to “On”.	⇒ page 63
– Electric windows: Check positioning (open and close functions)	⇒ page 61
– Calibrating compass (for North American region)	⇒ page 71
– Auxiliary heater: Set weekday in menu of combi-instrument • Only valid for vehicles with auxiliary heater	⇒ page 140
– Check vehicle interior for cleanliness: Front and rear seats, interior trim, carpets/mats, windows	
– Seat and carpet protective coverings: Remove	
– Install all equipment (if any) which has been packed inside vehicle: mats, wheel trims or hub caps.	
– Edge protection on doors (plastic foil): Remove	
– Check vehicle exterior for cleanliness: Paintwork, decorative parts, windows, wiper blades, surfaces	
– Wiper blade protection: Remove	⇒ page 137
– Wheel securing bolts: Tighten to prescribed torque setting	⇒ page 112

Protected by copyright. Copying for private or commercial purposes, in part or in whole, is not permitted unless authorised by Volkswagen AG. Volkswagen AG does not guarantee or accept any liability with respect to the correctness of information in this document. Copyright by Volkswagen AG.

Downloaded from www.Manualslib.com manuals search engine

Work to be completed	Page
– Tyre inflation pressure of all 4 wheels and spare wheel: Set to correct pressures (in the factory the tyres are inflated to 3.5 bar).	⇒ page 48
– Tyre pressure monitoring: Perform basic setting	⇒ page 116
– Optional equipment “Spare wheel package”: Check condition and inflation pressure.	⇒ page 48
– Vehicle from below, visual check for leaks and damage (without removing engine noise insulation cover): Engine, steering, protective bellows/boots, hoses and fluid reservoirs.	⇒ page 100
– Transport devices (vehicles with sports running gear): Remove blocking pieces from front axle springs.	⇒ page 143
– Vehicle underside (floor pan): Perform visual check for damage	⇒ page 143
– Window wash/wipe system and headlight washer system: Check function and settings; replenish with Windscreen Clear -G 052 164- to maximum	⇒ page 131
– Engine oil level: Check, top-up with engine oil if necessary; observe oil specifications!	⇒ page 101
– Engine and components in engine compartment (from above): Perform visual check for leaks and damage	⇒ page 100
– Coolant level: Check that it is at maximum	⇒ page 72
– Brake fluid: Check that it is at maximum	⇒ page 57
– “Your first service” sticker: Apply to driver side door pillar (B-pillar); sticker can be found on an instruction attached at front of vehicle wallet. Destroy the instruction after attaching the sticker!	⇒ page 30
– Long-life engine oil sticker: Apply to left side of lock carrier • Applies to vehicles with long-life service and PR number QG1 Note: Gradual deletion from week 04/07	⇒ page 30
– Hotline sticker (if fitted, gradual deletion: Apply to the inside of glove box cover • Only valid for Germany Note: Gradual deletion	⇒ page 32
– Check number and functions of keys, if necessary remove grease	
– Vehicle data sticker: Apply	⇒ page 30
♦ Service schedule: – Enter delivery inspection and enter a cross for the first service: ♦ Interval service for vehicles with long-life service (PR No. QG1) [1)] ♦ Oil change service for vehicles with time or distance dependent service (PR No. QG0/QG2) [1)] – Complete vehicle data in service schedule, see “Vehicle delivery documentation”	
– Check literature for vehicle is complete and prepare literature for delivery to customer	
– Perform road test (driving behaviour, noises, air conditioner etc.)	⇒ page 112

[1)] Service identification ⇒ page 7

Downloaded from www.Manualslib.com manuals search engine

2.4 Oil change service

Note

- *The oil change service is always a time or distance dependent service "QG0/QG2"* ⇒ page 8
- *Inform the customer if faults are found during service and repair measures are necessary.*

Caution

Only valid for diesel engines:

- *In some countries the sulphur content in diesel fuel exceeds 2000 ppm.*
- *The high sulphur content leads to excessive wear of cylinders and it considerably reduces the cleanliness of pistons.*
- *Therefore, in countries with elevated sulphur content in diesel fuel, change engine oil and fuel filter every 7,500 km.*
- *Your importer will inform you about countries with elevated sulphur content in diesel fuel.*

– Ask the customer if he requires:

- New wiper blades
- Replenish Windscreen Clear G 052 164 (cleanser and anti-freeze).

– Check if storage life date of first aid box has been exceeded and if warning triangle is fitted.

– Removing and installing engine compartment cover -bottom- (noise insulation tray) ⇒ page 99

The sequence of the individual service tasks has been tested and optimised. Therefore, it should be followed to avoid unnecessary interruptions in the work.

Work to be completed	Page
– Engine oil: Drain or extract[1], renew oil filter	⇒ page 101
– Front and rear brake pads/linings: Check thickness	⇒ page 59
– Engine oil: Replenish, observe oil specification	⇒ page 101
– Service interval display: Reset	⇒ page 126
– Enter date of next service on sticker and attach sticker to driver side door pillar (B-pillar).	⇒ page 30

1) For the V6 engine it is not permitted to extract engine oil.

Protected by copyright. Copying for private or commercial purposes, in part or in whole, is not permitted unless authorised by Volkswagen AG. Volkswagen AG does not guarantee or accept any liability with respect to the correctness of information in this document. Copyright by Volkswagen AG.

Downloaded from www.Manualslib.com manuals search engine

2.5 Interval service ▸2007

Note

- *The interval service is a time or distance dependent service "QG0/QG2" ⇒ page 8 and also a long-life service ⇒ page 7*
- *The interval service always includes an engine oil change! Additional type-specific tests ensure an extended oil change service.*
- *The prerequisites for the interval service with a running period of max. 2 years or 30,000 km can only be fulfilled if engine oil for long-life service is used or replenished.*
- *Inform the customer if faults are found during service and repair measures are necessary.*

Caution

Only valid for diesel engines:

- *In some countries the sulphur content in diesel fuel exceeds 2000 ppm.*
- *The high sulphur content leads to excessive wear of cylinders and it considerably reduces the cleanliness of pistons.*
- *Therefore, in countries with elevated sulphur content in diesel fuel, change engine oil and fuel filter every 7,500 km.*
- *Your importer will inform you about countries with elevated sulphur content in diesel fuel.*

– Ask the customer if he requires:

- New wiper blades
- Replenish Windscreen Clear G 052 164 (cleanser and anti-freeze).

– Check if storage life date of first aid box has been exceeded and if warning triangle is fitted.

– Removing and installing engine compartment cover -bottom- (noise insulation tray) ⇒ page 99

The sequence of the individual service tasks has been tested and optimised. Therefore, it should be followed to avoid unnecessary interruptions in the work.

Work to be completed	Page
– Battery: Check using battery tester with printer -VAS 5097A-	⇒ page 48
– Vehicle system test: Perform test	⇒ page 62
– Engine oil: Drain or extract[1], renew oil filter	⇒ page 101
– Tyres (including spare wheel): Check tread depth, wear pattern and inflation pressure	⇒ page 48
– Tyre pressure monitoring: Perform basic setting • If fitted	⇒ page 116

Protected by copyright. Copying for private or commercial purposes, in part or in whole, is not permitted unless authorised by Volkswagen AG. Volkswagen AG does not guarantee or accept any liability with respect to the correctness of information in this document. Copyright by Volkswagen AG.

Downloaded from www.Manualslib.com manuals search engine

Work to be completed	Page
– Tyre repair set: Check bottle for damage and if used; check and enter date of tyre sealant _____ • If fitted	⇒ page 118
– Front and rear brake pads/linings: Check thickness	⇒ page 59
– Engine oil: Replenish, observe oil specification	⇒ page 101
– Service interval display: Reset	⇒ page 126
– Enter date of next service on sticker and attach sticker to driver side door pillar (B-pillar): service intervals ⇒ page 9	⇒ page 30

1) For the V6 engine it is not permitted to extract engine oil.

2.6 Interval service 2008 ▸

Note

- *The interval service is a time or distance dependent service "QG0/QG2" ⇒ page 8 and also a long-life service ⇒ page 7*
- *The interval service always includes an engine oil change! Additional type-specific tests ensure an extended oil change service.*
- *If the interval service is performed together with an inspection service, see chapter ⇒ page 22 for additional work to be carried out.*
- *The prerequisites for the interval service with a running period of max. 2 years or 30,000 km can only be fulfilled if engine oil for long-life service is used or replenished.*
- *Inform the customer if faults are found during service and repair measures are necessary.*

Caution

Only valid for diesel engines:

- ***In some countries the sulphur content in diesel fuel exceeds 2000 ppm.***
- ***The high sulphur content leads to excessive wear of cylinders and it considerably reduces the cleanliness of pistons.***
- ***Therefore, in countries with elevated sulphur content in diesel fuel, change engine oil and fuel filter every 7,500 km.***
- ***Your importer will inform you about countries with elevated sulphur content in diesel fuel.***

– Ask the customer if he requires:

- New wiper blades
- Replenish Windscreen Clear G 052 164 (cleanser and anti-freeze).

Protected by copyright. Copying for private or commercial purposes, in part or in whole, is not permitted unless authorised by Volkswagen AG. Volkswagen AG does not guarantee or accept any liability with respect to the correctness of information in this document. Copyright by Volkswagen AG.

Downloaded from www.Manualslib.com manuals search engine

– Check if storage life date of first aid box has been exceeded and if warning triangle is fitted.

– Removing and installing engine compartment cover -bottom- (noise insulation tray) ⇒ page 99

The sequence of the individual service tasks has been tested and optimised. Therefore, it should be followed to avoid unnecessary interruptions in the work.

Work to be completed	Page
– Battery: Check using battery tester with printer -VAS 5097A-	⇒ page 48
– Summer tyres [1], winter tyres [2], all-season tyres [3]: enter type of tyre ____	
– Tyre inflation pressure of all 4 wheels and spare wheel: Correct	⇒ page 48
– Spare wheel: Check condition and wear pattern of tyre; enter tread depth: _____ mm	⇒ page 48
– Tyre repair set: Check bottle for damage and if used; check and enter date of tyre sealant _____ • If fitted	⇒ page 118
– Tyre pressure monitoring: Perform basic setting • If fitted	⇒ page 116
– Rear right wheel: Check condition and wear pattern of tyre; enter tread depth: _____ mm	⇒ page 48
– Rear left wheel: Check condition and wear pattern of tyre; enter tread depth: _____ mm	⇒ page 48
– Front left wheel: Check condition and wear pattern of tyre; enter tread depth: _____ mm	⇒ page 48
– Front right wheel: Check condition and wear pattern of tyre; enter tread depth: _____ mm	⇒ page 48
– Engine oil: Drain or extract[1], renew oil filter	⇒ page 101
– Front and rear brake pads/linings: Check thickness	⇒ page 59
– Brake system: Perform visual check for leaks and damage	⇒ page 58
– Engine oil: Replenish, observe oil specification	⇒ page 101
– Brake fluid level (dependent upon lining/pad wear): Check	⇒ page 57
– Service interval display: Reset	⇒ page 126
– Enter date of next service on sticker and attach sticker to driver side door pillar (B-pillar).	⇒ page 30

1) For the V6 engine it is not permitted to extract engine oil.

Downloaded from www.Manualslib.com manuals search engine

2.7 Interval service inspection ▸2007

Note

- *Inform the customer if faults are found during service and repair measures are necessary.*
- *If service work has been performed for the interval service at least 10,000 km before the 60,000 km inspection, this work must not be carried out again at the 60,000 km inspection.*
- *The service work for "Interval service" is marked with a footnote [1]*

Caution

Only valid for diesel engines:

- *In some countries the sulphur content in diesel fuel exceeds 2000 ppm.*
- *The high sulphur content leads to excessive wear of cylinders and it considerably reduces the cleanliness of pistons.*
- *Therefore, in countries with elevated sulphur content in diesel fuel, change engine oil and fuel filter every 7,500 km.*
- *Your importer will inform you about countries with elevated sulphur content in diesel fuel.*

– Ask the customer if he requires:

- New wiper blades
- Replenish Windscreen Clear G 052 164 (cleanser and anti-freeze).

– Check if storage life date of first aid box has been exceeded.

– Removing and installing engine compartment cover -bottom- (noise insulation tray) ⇒ page 99

The sequence of the individual service tasks has been tested and optimised. Therefore, it should be followed to avoid unnecessary interruptions in the work.

Work to be completed	Page
Electrics	
– Battery: Check using battery tester with printer -VAS 5097A- [2]	⇒ page 48
– Front lights - check function: Side lights, dipped beam, main beam, fog lights, turn signals, hazard warning lights	
– Rear lights - check function: Brake lights (including 3rd brake light), tail lights, reversing lights, rear fog light, number plate light, turn signals, hazard warning lights, luggage/load compartment lights	
– Static cornering light (cornering light) and driving light assist: Check function • If fitted	⇒ page 43
– Interior and glove compartment lights, cigarette lighter, warning lamps and horn: Check function	

Volkswagen AG. Volkswagen AG does not guarantee or accept any liability with respect to the correctness of information in this document. Copyright by Volkswagen AG. Protected by copyright. Copying for private or commercial purposes, in part or in whole, is not permitted unless authorised by Volkswagen AG.

Downloaded from www.Manualslib.com manuals search engine

Work to be completed	Page
– Vehicle system test: Perform test	⇒ page 62
– Service interval display: Reset 2	⇒ page 126
Vehicle exterior	
– Window wash/wipe system and headlight washer system: Check function and settings	⇒ page 131
– Sunroof: Check function, clean guide rails and lubricate with special grease	⇒ page 129
– Wiper blades: Check for damage and park position	⇒ page 139
– Door arrester: Grease	⇒ page 141
Tyres	
– Summer tyres [1], winter tyres [2], all-season tyres [3]: enter type of tyre ____	
– Tyre inflation pressure of all 4 wheels and spare wheel: Correct 2	⇒ page 48
– Spare wheel: Check condition and wear pattern of tyre; enter tread depth: _____ mm 2	⇒ page 48
– Tyre repair set: Check bottle for damage and if used; check and enter date of tyre sealant _____ • If fitted	⇒ page 118
– Tyre pressure monitoring: Perform basic setting 2 • If fitted	⇒ page 116
– Rear right wheel: Check condition and wear pattern of tyre; enter tread depth: _____ mm 2	⇒ page 48
– Rear left wheel: Check condition and wear pattern of tyre; enter tread depth: _____ mm 2	⇒ page 48
– Front left wheel: Check condition and wear pattern of tyre; enter tread depth: _____ mm 2	⇒ page 48
– Front right wheel: Check condition and wear pattern of tyre; enter tread depth: _____ mm 2	⇒ page 48
Vehicle from below	
– Engine oil: Drain or extract[1], renew oil filter 2	⇒ page 101
– Engine and components in engine compartment (from below): Visual check for leaks and damage	⇒ page 100
– Gearbox, final drive and drive shaft bellows: Visual check for leaks and damage	⇒ page 65
– Swivel joints: Visual check of swivel joint boots for leaks and damage	⇒ page 43
– Front and rear final drive: Check oil level	⇒ page 159

Copyright by Volkswagen AG. Volkswagen AG does not guarantee or accept any liability with respect to the correctness of information in this document. Copying for private or commercial purposes, in part or in whole, is not permitted unless authorised by Volkswagen AG.

Downloaded from www.Manualslib.com manuals search engine

Work to be completed	Page
– Brake system: Perform visual check for leaks and damage	⇒ page 58
– Front and rear brake pads/linings: Check thickness 2	⇒ page 59
– Track rod ends: Check play, security and boots	⇒ page 140
– Exhaust system: Visual check for leaks, security and damage	
– Underbody: Visual check for damage to underbody sealant, underbody panels, routing of lines, plugs etc.	⇒ page 143
Engine compartment	
– Engine oil: Replenish, observe oil specification	⇒ page 101
– Engine and components in engine compartment (from above): Perform visual check for leaks and damage	⇒ page 100
– Window wash/wipe system: Replenish with Windscreen Clear -G 052 164- (only if customer requires).	
– Automatic gearbox: Check ATF level	⇒ page 44
– Cooling system: Check frost protection and coolant level • Frost protection specification -25 °C. In countries with arctic climate -35 °C	⇒ page 72
– Poly V-belt: Check condition	⇒ page 70
– Poly V-belt: Check tension, adjust if necessary • For engines without automatic tensioning roller	⇒ page 69
– Brake fluid level (dependent upon lining/pad wear): Check	⇒ page 57
Final checks	
– Headlights: Check adjustment	⇒ page 119
– “Your next service” sticker: Enter next due date and attach sticker to driver side door pillar (B-pillar)	⇒ page 30
– Perform road test (driving behaviour, noises, air conditioner etc.)	⇒ page 112

1) For the V6 engine it is not permitted to extract engine oil.

2) If this service work has been performed for the interval service, it is not necessary to carry out this work again at the 60,000 km inspection.

2.8 Inspection service 2008 ▸

Note

- *The inspection service does not include an oil change and is not indicated on the service interval display (SID) ⇒ page 8 .*
- *Inform the customer if faults are found during service and repair measures are necessary.*

Downloaded from www.Manualslib.com manuals search engine

Caution

Only valid for diesel engines:

- *In some countries the sulphur content in diesel fuel exceeds 2000 ppm.*
- *The high sulphur content leads to excessive wear of cylinders and it considerably reduces the cleanliness of pistons.*

◆ *Therefore, in countries with elevated sulphur content in diesel fuel, change engine oil and fuel filter every 7,500 km.*

◆ *Your importer will inform you about countries with elevated sulphur content in diesel fuel.*

– Ask the customer if he requires:

- New wiper blades
- Replenish Windscreen Clear G 052 164 (cleanser and anti-freeze).

– Check if storage life date of first aid box has been exceeded and if warning triangle is fitted.

– Removing and installing engine compartment cover -bottom- (noise insulation tray) ⇒ page 99

The sequence of the individual service tasks has been tested and optimised. Therefore, it should be followed to avoid unnecessary interruptions in the work.

Work to be completed	Page
Electrics	
– Front lights - check function: Side lights, dipped beam, main beam, fog lights, turn signals, hazard warning lights	
– Rear lights - check function: Brake lights (including 3rd brake light), tail lights, reversing lights, rear fog light, number plate light, turn signals, hazard warning lights, luggage/load compartment lights	
– Static cornering light (cornering light) and driving light assist: Check function • If fitted	⇒ page 43
– Interior and glove compartment lights, cigarette lighter, warning lamps and horn: Check function	
Vehicle exterior	
– Window wash/wipe system and headlight washer system: Check function and settings	⇒ page 131
– Sunroof: Check function, clean guide rails and lubricate with special grease	⇒ page 129
– Wiper blades: Check for damage and park position	⇒ page 139
– Door arrester: Grease	⇒ page 141
Tyres	
– Summer tyres [1], winter tyres [2], all-season tyres [3]: enter type of tyre ____	
– Tyre inflation pressure of all 4 wheels and spare wheel: Correct	⇒ page 48
– Spare wheel: Check condition and wear pattern of tyre; enter tread depth: _____ mm	⇒ page 48

Protected by copyright. Copying for private or commercial purposes, in part or in whole, is not permitted unless authorised by Volkswagen AG. Volkswagen AG does not guarantee or accept any liability with respect to the correctness of information in this document. Copyright by Volkswagen AG.

Downloaded from www.Manualslib.com manuals search engine

Work to be completed	Page
– Tyre repair set: Check bottle for damage and if used; check and enter date of tyre sealant _____ • If fitted	⇒ page 118
– Tyre pressure monitoring: Perform basic setting • If fitted	⇒ page 116
– Rear right wheel: Check condition and wear pattern of tyre; enter tread depth: _____ mm	⇒ page 48
– Rear left wheel: Check condition and wear pattern of tyre; enter tread depth: _____ mm	⇒ page 48
– Front left wheel: Check condition and wear pattern of tyre; enter tread depth: _____ mm	⇒ page 48
– Front right wheel: Check condition and wear pattern of tyre; enter tread depth: _____ mm	⇒ page 48
Vehicle from below	
– Engine and components in engine compartment (from below): Visual check for leaks and damage	⇒ page 100
– Gearbox, final drive and drive shaft bellows: Visual check for leaks and damage	⇒ page 65
– Swivel joints: Visual check of swivel joint boots for leaks and damage	⇒ page 43
– Front and rear final drive: Check oil level • Valid for vehicles with 4motion	⇒ page 159
– Track rod ends: Check play, security and boots	⇒ page 140
– Exhaust system: Visual check for leaks, security and damage	
– Underbody: Visual check for damage to underbody sealant, underbody panels, routing of lines, plugs etc.	⇒ page 143
Engine compartment	
– Engine and components in engine compartment (from above): Perform visual check for leaks and damage	⇒ page 100
– Window wash/wipe system: Replenish with Windscreen Clear -G 052 164- (only if customer requires).	
– Automatic gearbox: Check ATF level, replenish if necessary	⇒ page 44
– Cooling system: Check frost protection and coolant level • Frost protection specification -25 °C. In countries with arctic climate -35 °C	⇒ page 72
– Poly V-belt: Check condition	⇒ page 70
– Poly V-belt: Check tension, adjust if necessary • For engines without automatic tensioning roller	⇒ page 69
Final checks	
– Headlights: Check adjustment	⇒ page 119
– “Your next service” sticker: Enter next due date and attach sticker to driver side door pillar (B-pillar)	⇒ page 30
– Perform road test (driving behaviour, noises, air conditioner etc.)	⇒ page 112

Downloaded from www.Manualslib.com manuals search engine

2.9 Time or distance dependent additional work

Depending on conditions under which the vehicle is used ⇒ page 36 and vehicle equipment, extra service work must be performed in addition to the interval service, inspection service or interval service inspection.

It is also possible, to perform additional work outside the service intervals with regard to the entries in the service schedule (or sticker: next service).

Every 7,500 km

Additional work	Page
– Fuel filter: Renew • Valid when using diesel >2000 ppm sulphur content	⇒ page 74

Every 30,000 km

Additional work	Page
– Fuel filter: Renew • When using diesel “NOT” conforming to EN 590 • When using RME (biodiesel) according to “EN 14214” for vehicles up to 05.2006	⇒ page 74

Every 60,000 km

Additional work	Page
– Dual clutch gearbox (DSG) 02E: Renew gear oil and filter • Not valid for 7-speed dual clutch gearbox 0AM	⇒ page 61
– Automatic gearbox: Change ATF • Only valid for 09G gearboxes in countries with hot climate, China and USA	⇒ page 44
– Haldex coupling: Change oil • Only applies to 4motion • Information on arrangement of plugs ⇒ TPI 2017008	⇒ page 66
– Dust and pollen filter (cabin filter): Renew • Applies to vehicles driving more than 60,000 km in 2 years	⇒ page 118
– Spark plugs: Renew • Applies to vehicles driving more than 60,000 km in 4 years • Not valid for 1.8 TSI, 2.0 TSI; 2.0 TFSI and V6 FSI engine	⇒ page 146

Protected by copyright. Copyright by Volkswagen AG. Copying for private or commercial purposes, in part or in whole, is not permitted unless authorised by Volkswagen AG. Volkswagen AG does not guarantee or accept any liability with respect to the correctness of information in this document.

Downloaded from www.Manualslib.com manuals search engine

Additional work	Page
– Air filter element: Renew and clean housing • Valid for Golf GTI “Edition 30” and Golf GTI “Pirelli” • Rubber buffers for engine cover in conjunction with “Renewing air filter element” ⇒ page 95	⇒ page 80
– Sliding sunroof drains: Check flow and clean if necessary • Only valid for North America	⇒ page 129

Every 90,000 km

Additional work	Page
– Air filter element: Renew and clean housing • Not valid for Golf GTI “Edition 30” and Golf GTI “Pirelli” • Applies to vehicles driving more than 90,000 km in 6 years	⇒ page 80
– Fuel filter: Renew • When using diesel conforming to EN 590	⇒ page 74
– Spark plugs: Renew • Applies to vehicles driving more than 90,000 km in 6 years • Only valid for 1.8 TSI, 2.0 TSI; 2.0 TFSI and V6 FSI engine	⇒ page 146

At 90,000 km then every 30,000 km

Additional work	Page
– Camshaft drive toothed belt: Check • Only valid for petrol engines without prescribed toothed belt change interval	⇒ page 145

Every 120,000 km

Additional work	Page
– Camshaft drive toothed belt: Renew • Only valid for 4-cylinder TDI unit injector engines up to model year 2006 • It is not necessary to renew before the current interval	⇒ page 145
– Camshaft drive toothed belt: Renew • Only valid for 4-cylinder SDI unit injector engines • It is not necessary to renew before the current interval	⇒ page 145

Protected by copyright. Copying for private or commercial purposes, in part or in whole, is not permitted unless authorised by Volkswagen AG. Volkswagen AG does not guarantee or accept any liability with respect to the correctness of information in this document. Copyright by Volkswagen AG.

Downloaded from www.Manualslib.com manuals search engine

Every 150,000 km

Additional work	Page
– Camshaft drive toothed belt: Renew • Only valid for 4-cylinder TDI unit injector engines from model year 2007 • It is not necessary to renew before the current interval	⇒ page 145

At 150,000 km then every 30,000 km

– Diesel particulate filter: Check • Vehicles with factory-fitted diesel particulate filter ⇒ page 1	⇒ page 60

Every 180,000 km

Additional work	Page
– Camshaft drive toothed belt: Renew • Valid for 2.0 l FSI and 147 and 169 kW TFSI engines • It is not necessary to renew before the current interval	⇒ page 145

Every 240,000 km

Additional work	Page
– Toothed belt tensioning roller: Renew • Only valid for 4-cylinder TDI unit injector engines up to model year 2006 • It is not necessary to renew before the current interval	⇒ page 145
– Toothed belt tensioning roller: Renew • Only valid for 4-cylinder SDI unit injector engines • It is not necessary to renew before the current interval	⇒ page 145

Every 300,000 km

Additional work	Page
– Toothed belt tensioning roller: Renew • Only valid for 4-cylinder TDI unit injector engines from model year 2007 • It is not necessary to renew before the current interval	⇒ page 145

Every 12 months (only valid for Germany)

Additional work	Page
– Exhaust emissions test: Perform test • For vehicles with commercial passenger transport, e.g. taxis	⇒ page 160

Protected by copyright. Copyright by Volkswagen AG. Volkswagen AG does not guarantee or accept any liability with respect to the correctness of information in this document. Copyright by Volkswagen AG. Copying for private or commercial purposes, in part or in whole, is not permitted unless authorised by Volkswagen AG.

Downloaded from www.Manualslib.com manuals search engine

Every 2 years

Additional work	Page
– Brake and clutch system: Change brake fluid • Only valid for vehicles ‣2007	⇒ page 53
– Renew dust and pollen filter (cabin filter) • Only valid for vehicles driving less than 60,000 km in 2 years	⇒ page 118

3 years after initial registration and then every 2 years

– Brake and clutch system: Change brake fluid • Only valid for vehicles 2008‣	⇒ page 53
– Exhaust emissions test (EET): Perform test • For commercial passenger transport, e.g. taxis: every 12 months • Only valid for Germany	⇒ page 160

Every 4 years

Additional work	Page
– Spark plugs: Renew • Only valid for vehicles driving less than 60,000 km in 4 years • Not valid for 1.8 TSI, 2.0 TSI; 2.0 TFSI and V6 FSI engine	⇒ page 146

Every 6 years

Additional work	Page
– Air filter: Clean housing and renew filter element • Not valid for Golf GTI “Edition 30” and Golf GTI “Pirelli” • Only valid for vehicles driving less than 90,000 km in 6 years	⇒ page 80
– Spark plugs: Renew • Only valid for vehicles driving less than 90,000 km in 6 years • Only valid for 1.8 TSI, 2.0 TSI; 2.0 TFSI and V6 FSI engine	⇒ page 146

Copyright by Volkswagen AG. Volkswagen AG does not guarantee or accept any liability with respect to the correctness of information in this document. Copying for private or commercial purposes, in part or in whole, is not permitted unless authorised by Volkswagen AG.

Downloaded from www.Manualslib.com manuals search engine

Protected by copyright. Copying for private or commercial purposes, in part or in whole, is not permitted unless authorised by Volkswagen AG. Volkswagen AG does not guarantee or accept any liability with respect to the correctness of information in this document. Copyright by Volkswagen AG.

3 General

In this chapter you will obtain information on the following subjects:

Raising vehicle with lifting platform and trolley jack ⇒ page 29

Sticker ⇒ page 30

Entries in service schedule ⇒ page 32

Connecting vehicle diagnostic tester ⇒ page 32

Vehicle identification number ⇒ page 34

Vehicle data sticker ⇒ page 36

Severe operating conditions ⇒ page 36

Engine code and engine number ⇒ page 37

RME fuel (biodiesel) for vehicles up to 05.2006 ⇒ page 37

Type plate ⇒ page 38

3.1 Raising vehicle with lifting platform and trolley jack

3.1.1 Safety notes:

WARNING

- *Before driving onto a lifting platform, ensure that there is sufficient clearance between low-lying vehicle components and lifting platform.*
- *Before driving a vehicle onto a lifting platform it must be ensured that the vehicle weight does not exceed the permissible lifting capacity of the platform.*
- *Vehicle may be lifted only at points indicated in figure to avoid damaging vehicle floor pan or tipping vehicle.*
- *Never start engine and engage a gear with vehicle lifted as long as even one driven wheel has contact with the floor! Disregarding these warnings risks the danger of an accident!*
- *If work is to be performed under vehicle, it must be supported by suitable stands.*

3.1.2 Lifting points for lifting platform and trolley jack:

Front lifting point:

– Position support plate, in area of side member marking -arrow A-, at vertical reinforcement of floor pan -arrow B-.

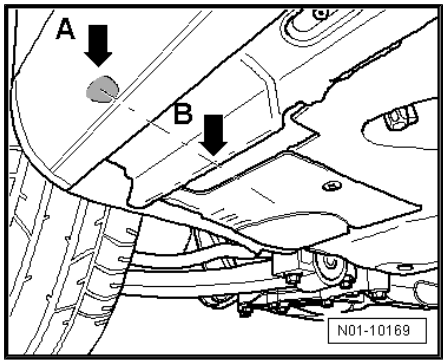

WARNING

Ensure that side member reinforcement seats centrally on support plate of hoist mounting.

Downloaded from www.Manualslib.com manuals search engine

Rear lifting point:

– Position support plate, in area of side member marking -arrow A-, at vertical reinforcement of floor pan -arrow B-.

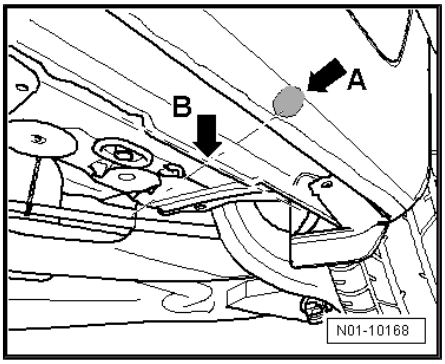

> ⚠ **WARNING**
>
> ***Ensure that side member reinforcement seats centrally on support plate of hoist mounting.***

3.2 Sticker

In this chapter there are stickers which are valid for the German market. The stickers determined for your country can be obtained from your importer.

Attaching “Your first service” sticker (at delivery inspection) ⇒ page 30 .

Attaching “Your next service” sticker ⇒ page 31

Attaching “data sticker” in customer service schedule ⇒ page 31

Attach hotline sticker ⇒ page 32

3.2.1 Attaching “Your first service” sticker (at delivery inspection):

Sticker “Your first service - oil change service” for vehicles with PR number “QG0/QG2” ⇒ page 8

Sticker “Your first service - interval service” for vehicles with PR number “QG1” ⇒ page 7

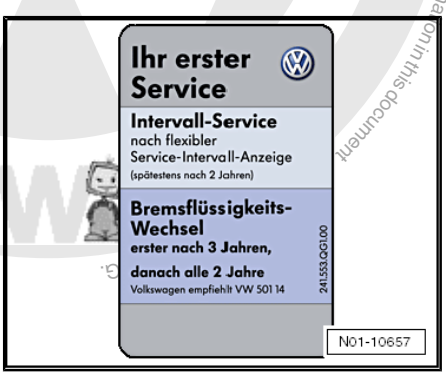

Protected by copyright. Copying for private or commercial purposes, in part or in whole, is not permitted unless authorised by Volkswagen AG. Volkswagen AG does not guarantee or accept any liability with respect to the correctness of information in this document.

Downloaded from www.Manualslib.com manuals search engine

– Apply sticker on driver side door pillar (B-pillar) -arrow-; the sticker is located on an instruction which is attached at front in the vehicle wallet. Destroy the instruction after attaching the sticker!

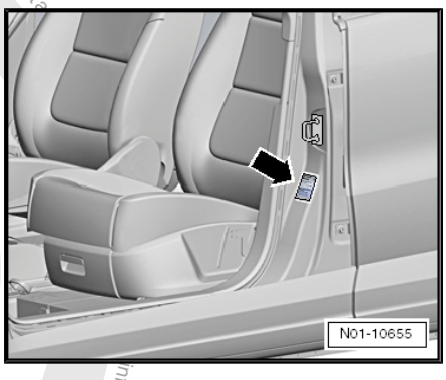

3.2.2 Attaching “Your next service dates” sticker:

– “Your next service dates” sticker: Enter a cross in position for next oil change service or inspection service (next service due) and enter date and mileage

Service intervals ⇒page 10

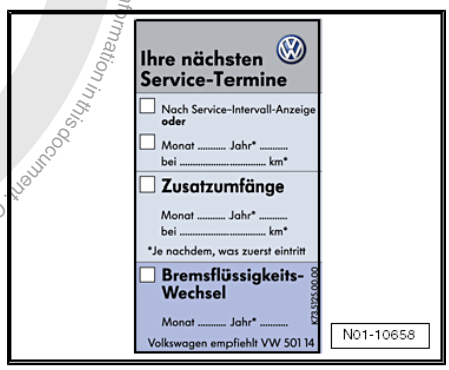

– Attach sticker to driver side door pillar (B-pillar) -arrow-.

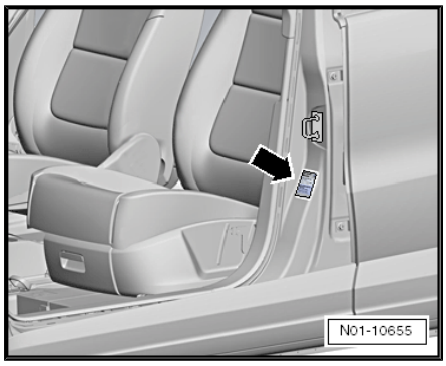

3.2.3 Attaching “data sticker” in customer service schedule:

– Attach the lower of the two data stickers -arrow- in the service schedule.

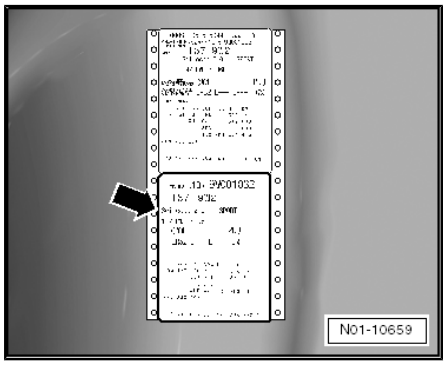

Downloaded from www.Manualslib.com manuals search engine

3.2.4 Attaching hotline sticker

– Attach hotline sticker to the inside of glove box cover as shown.

• Only valid for Germany

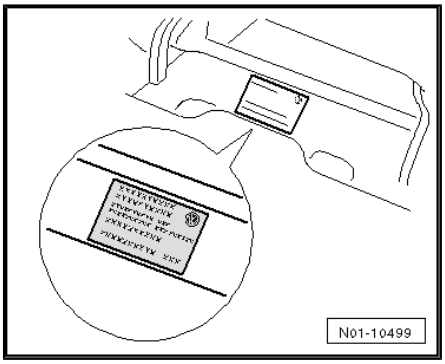

3.3 Entries in service schedule

If a component is changed which has a change interval prescribed by the manufacturer, e.g. the toothed belt, the new change interval begins at the time the component is changed.

• Therefore it is very important, every time a component is changed, to document this in the service schedule.

• This also applies to components which were changed before the regular change interval.

Note

♦ *When using "Genuine parts kits" it must be taken into account whether it is technically necessary to change all the components included in the genuine parts kits.*

♦ *If more components are renewed than is technically necessary, inform the customer before repair!*

3.4 Connecting vehicle diagnostic tester

Special tools and workshop equipment required

♦ Vehicle diagnostic, testing and information system -VAS 5051 A-

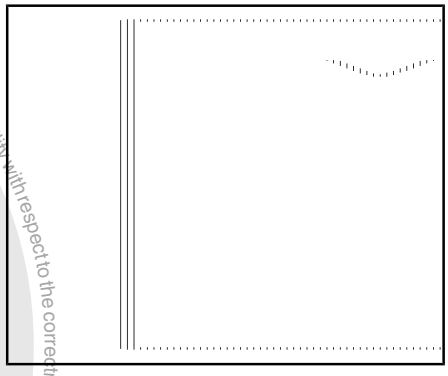

Volkswagen AG does not guarantee or accept any liability with respect to the correctness of information in this document. Copyright by Volkswagen AG.
Protected by copyright. Copying for private or commercial purposes, in part or in whole, is not permitted unless authorised.

Downloaded from www.Manualslib.com manuals search engine

- Vehicle diagnostic, testing and information system -VAS 5051B-

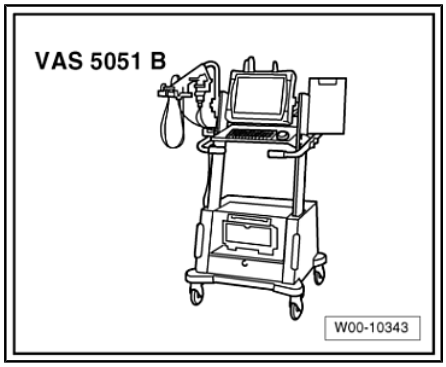

- Diagnostic cable -VAS 5051/6A-

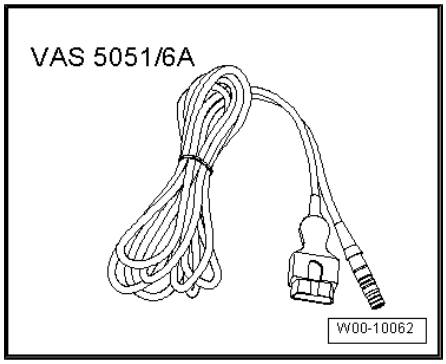

- Vehicle diagnostic and service information system -VAS 5052- or subsequent units

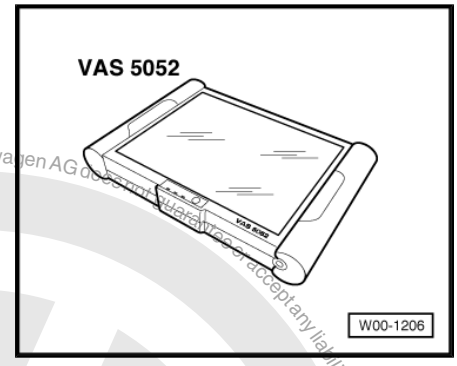

- Diagnostic system -VAS 5053-

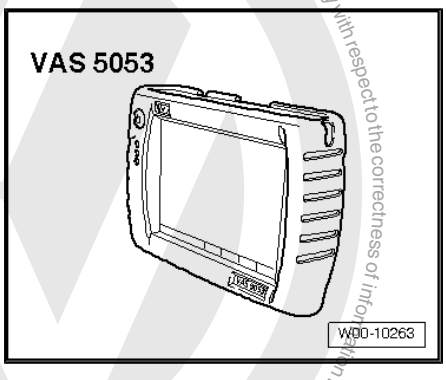

Protected by copyright. Copying for private or commercial purposes, in part or in whole, is not permitted unless authorised by Volkswagen AG. Volkswagen AG does not guarantee or accept any liability with respect to the correctness of information in this document. Copyright by Volkswagen AG.

Downloaded from www.Manualslib.com manuals search engine

- Diagnostic cable -VAS 5052/3-

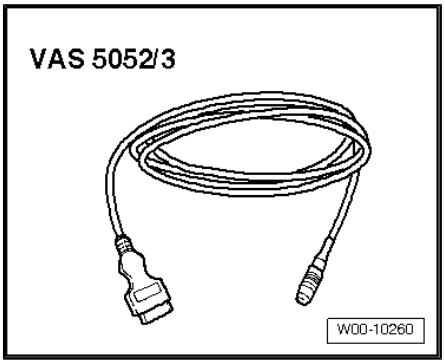

Note

Ensure that the selected vehicle diagnostic tester is only used with the respective diagnostic cable.

WARNING

- ***Always secure testing and measuring equipment on the rear seat during a road test.***
- ***Only a passenger may operate these devices during a drive.***

– Carry out the following procedure:
– Connect diagnostic cable connector to diagnostic connection.
– Switch on vehicle diagnostic tester .
– Switch on ignition.

Now follow screen display to start desired functions.

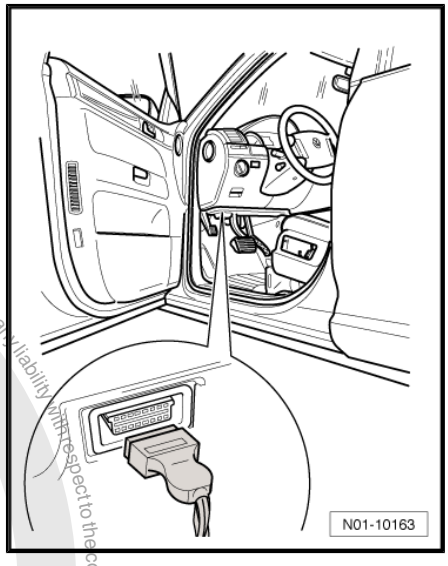

3.5 Vehicle identification number

Note

Depending on vehicle equipment, the vehicle identification number can be found at different places in the vehicle.

- Vehicle identification number on lower edge of windscreen ⇒ page 35
- Vehicle identification number on extension of longitudinal member ⇒ page 35

Protected by copyright. Copyright by Volkswagen AG. Volkswagen AG does not guarantee or accept any liability with respect to the correctness of information in this document. Copying for private or commercial purposes, in part or in whole, is not permitted unless authorised by Volkswagen AG.

Downloaded from www.Manualslib.com manuals search engine

Protected by copyright. Copying for private or commercial purposes, in part or in whole, is not permitted unless authorised by Volkswagen AG. Volkswagen AG does not guarantee or accept any liability with respect to the correctness of information in this document. Copyright by Volkswagen AG.

- Vehicle identification number on suspension strut mounting ⇒ page 35

Location engine compartment

3.5.1 Vehicle identification number on lower edge of windscreen

The vehicle identification number (chassis number) -arrow- is located on left-hand side of vehicle in windscreen near the wiper mounting. It is visible from outside.

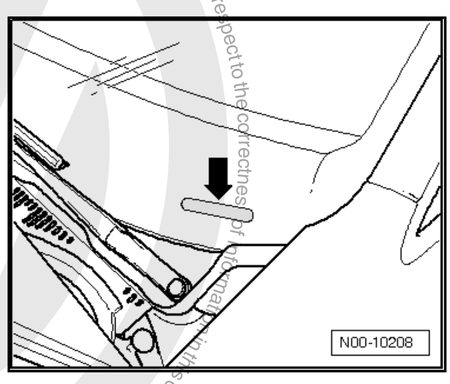

3.5.2 Vehicle identification number on extension of longitudinal member

The vehicle identification number is located on the extension of longitudinal member -arrow-.

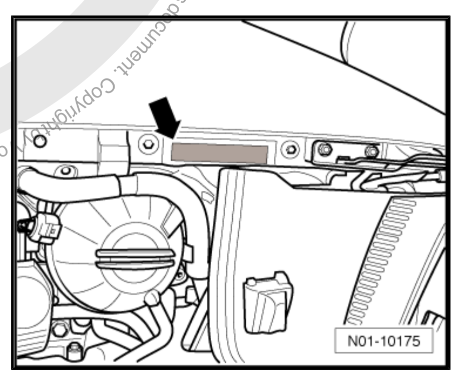

3.5.3 Vehicle identification number on suspension strut mounting

The vehicle identification number is located on suspension strut mounting, front right -arrow-.

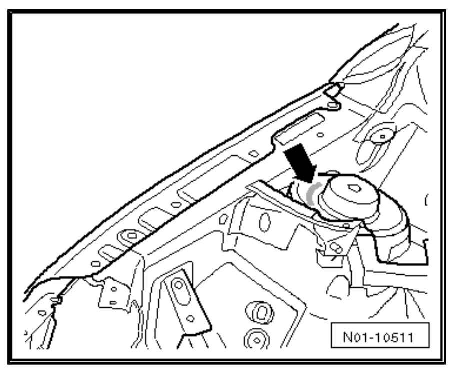

3.5.4 Interpretation of vehicle identification number:

WVW	ZZZ	1K1 [1]/ 5M1 [2]	Z	4	W	000 234
Manufacturer's code	Filler characters	Type	Filler characters	Model year 2004	Production location	Serial number

1) Golf 2004 ▸

2) Golf Plus 2005 ▸

Downloaded from www.Manualslib.com manuals search engine

3.6 Vehicle data sticker

The vehicle data sticker -arrow- is located in rear of vehicle on the left in spare wheel recess. The vehicle data sticker is also found in the service schedule for the customer.

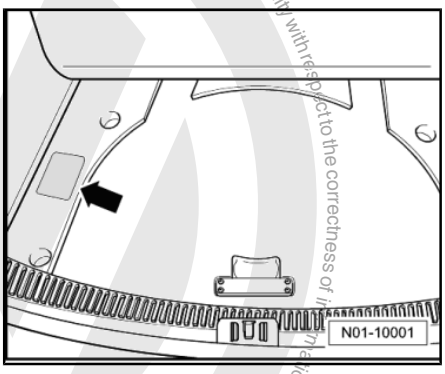

The sticker includes the following vehicle data:

1 - Vehicle identification number (chassis number)

2 - Vehicle type, engine output, gearbox

3 - Engine and gearbox code letters, paint number, interior equipment

4 - Optional equipment, PR numbers

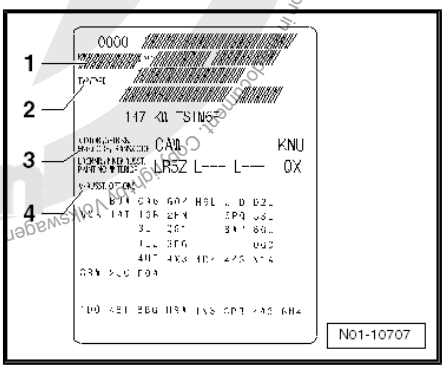

The sticker in service schedule includes the same data. The legend can be found below the sticker.

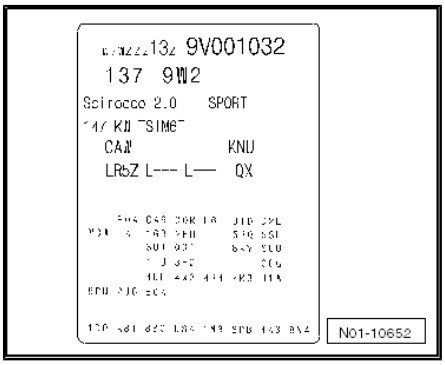

3.7 Severe operating conditions

If the vehicle is used under severe operating conditions some jobs will have to be performed before the next service due or at shorter service intervals.

Severe operating conditions

- Regular short trips or stop and go operation in urban traffic
- High percentage of cold starts
- Vehicle is used in areas with winter temperatures over a long period
- Regular long periods of idling (e.g. taxis)
- Vehicle is often driven under full load or towing a trailer
- Using diesel with elevated sulphur content
- Regular operation in areas with high levels of dust

Downloaded from www.Manualslib.com manuals search engine

3.8 Engine code and engine number

Note

Four-digit engine codes are being introduced, starting with letter "C". The first 3 digits show the mechanical design of engine and are stamped on the engine as previously. The fourth digit shows the engine output and torque and varies according to control unit.

Engine code and engine number are located:

- "Power unit" ⇒ Power unit; Rep. Gr. 00 ; Engine number "Technical data/engine number"
- On vehicle data sticker ⇒ page 36

3.9 RME fuel (biodiesel) for vehicles up to 05.2006

Note

For vehicles as of 06.2006 RME fuel must not be used.

RME fuel may be used only in vehicles which have been approved for this purpose by Volkswagen - either in the standard version or in vehicles which have had special equipment (PR No. 2G0) for this purpose.

Caution

- ***When RME fuel is used and your vehicle is not suitable for this, the fuel system can be damaged.***
- ***When filling the tank with biodiesel, only use RME fuel conforming to EN 14214 (FAME)!***
- ***When biodiesel is used which does not conform to the required standard, the fuel filter can become blocked.***

RME fuel must conform to EN 14214 (FAME).

- RME means "Rapeseed Methyl Ester".
- EN means "Euro standard".
- FAME means "Fatty Acid Methyl Ester".

The RME compatibility of the vehicle can be identified by the PR number 2G0 on the vehicle data sticker ⇒ page 36 .

Characteristics of RME fuel

- Performance can slightly be lower when using biodiesel.
- Fuel consumption can slightly be higher when using biodiesel.
- RME can be used in winter at temperatures to approx. -10 °C
- At ambient temperatures below -10 °C we recommend using winter diesel fuel.

Protected by copyright. Copying for private or commercial purposes, in part or in whole, is not permitted unless authorised by Volkswagen AG. Volkswagen AG does not guarantee or accept any liability with respect to the correctness of information in this document. Copyright by Volkswagen AG.

Downloaded from www.Manualslib.com manuals search engine

Note

- *When using biodiesel observe the changed intervals for changing the fuel filter* *⇒ page 16* *.*
- *If it is planned not to use the vehicle for approx. two weeks, it is recommended to fill the tank with original diesel beforehand and drive approx. 50 km, to prevent damage to the fuel injection system.*

3.10 Type plate

Note

Vehicles for certain export countries have no type plate.

4-door vehicles

The type plate -arrow 1- is visible in lower area of B pillar, when the left front door is opened.

The sticker includes the following vehicle data:

A - Vehicle identification number

B - Axle load

C - Model identification number

2-door vehicles

The type plate is visible at the lower door pillar when the right door is opened.

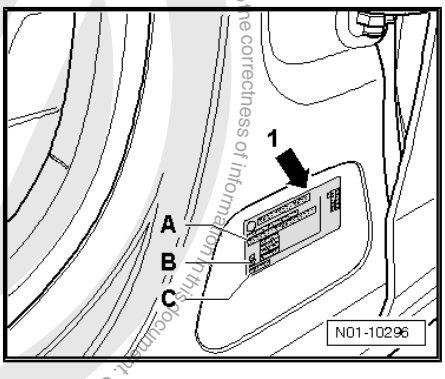

Protected by copyright. Copying for private or commercial purposes, in part or in whole, is not permitted unless authorised by Volkswagen AG. Volkswagen AG does not guarantee or accept any liability with respect to the correctness of information in this document. Copyright by Volkswagen AG.

Downloaded from www.Manualslib.com manuals search engine

4 Descriptions of work

In this chapter you will obtain information on the following subjects:

Removable towing bracket: Check and clean if necessary ⇒ page 41

Swivel joints: Visual check ⇒ page 43

Front and rear final drive: Check oil level ⇒ page 159

Front passenger front airbag: Check key switch and “On/Off function” ⇒ page 63

Driving light assist and cornering light: Check function ⇒ page 43

Automatic gearbox: Check ATF level, 09G gearbox ⇒ page 44

Automatic gearbox: Change ATF (09G gearbox) ⇒ page 44

Battery: Check battery terminal clamps for secure seating ⇒ page 45

Battery: Check using battery tester with printer VAS 5097A or VAS 6161 ⇒ page 48

Checking tyres: Condition, wear pattern, tyre pressure, tread depth and age of tyres ⇒ page 48

Brake and clutch system: Change brake fluid ⇒ page 53

Brake fluid level: Check ⇒ page 57

Brake system and shock absorbers: Perform visual check for leaks and damage ⇒ page 58

Front and rear brake pads: Check thickness ⇒ page 59

Checking diesel particulate filter ⇒ page 60

Dual clutch gearbox (DSG) 02E: Change oil and filter ⇒ page 61

Electric windows: Check positioning (open and close functions) ⇒ page 61

Vehicle system test: Perform test ⇒ page 62

Protective bellows: Visual check ⇒ page 65

Renewing rubber buffers for engine cover ⇒ page 95

Haldex coupling (Golf 4motion): Change oil ⇒ page 66

Poly V-belt: Check condition ⇒ page 70

Poly V-belt: Adjust tension on engines without automatic tensioning roller ⇒ page 69

Calibrating compass (for North American market) ⇒ page 71

Cooling system: Check frost protection and coolant level ⇒ page 72

Fuel filter: Renew ⇒ page 74

Air filter: Clean housing and renew filter element ⇒ page 80

Engine cover -top-: Removing and installing ⇒ page 89

Removing and installing engine compartment cover -bottom- (noise insulation) ⇒ page 99

Protected by copyright. Copying for private or commercial purposes, in part or in whole, is not permitted unless authorised by Volkswagen AG. Volkswagen AG does not guarantee or accept any liability with respect to the correctness of information in this document. Copyright by Volkswagen AG.

Downloaded from www.Manualslib.com manuals search engine

Engine and components in engine compartment (from above and below): Perform visual check for leaks and damage ⇒ page 100

Oil level: Check ⇒ page 101

Engine oil: Drain or extract; renew oil filter and replenish engine oil ⇒ page 101

Performing road test (driving behaviour, noises, air conditioner etc.) ⇒ page 112

Wheel securing bolts: Tighten to correct torque setting ⇒ page 112

Radio/radio navigation system: Enter PIN of anti-theft coding and store local radio stations to station buttons ⇒ page 115

Reading radio code using vehicle diagnostic tester ⇒ page 114

Tyre pressure monitoring: Perform basic setting ⇒ page 116

Tyre repair set ⇒ page 118

Dust and pollen filter: Clean housing and renew filter element ⇒ page 118

Headlight adjustment: Check ⇒ page 119

Service interval display: Reset ⇒ page 126

Service interval display: Recode ⇒ page 127

Sunroof: Check function, clean and grease guide rails ⇒ page 129

Sliding sunroof drains: Check flow and clean if necessary ⇒ page 129

Window wash/wipe system and headlight washer system: Check function ⇒ page 131

Wiper blade protection: Remove ⇒ page 137

Track rod ends: Check play, security and boots ⇒ page 140

Auxiliary heater: Set weekday in menu of combi-instrument ⇒ page 140

Door arrester: Grease ⇒ page 141

Transportation mode: Switch off ⇒ page 141

Transportation devices: Remove blocking pieces from springs on front axle ⇒ page 143

Underbody: Visual check for damage to underbody sealant, underbody panels, routing of lines, plugs etc. ⇒ page 143

Clock: Set to correct time ⇒ page 144

Toothed belt and toothed belt tensioning roller: Renew (TDI unit injector) ⇒ page 145

Camshaft drive toothed belt: Renew (only 2.0 l FSI and TFSI) ⇒ page 145

Camshaft drive toothed belt: Check (4-cylinder petrol engines) ⇒ page 145

Spark plugs: Renew ⇒ page 146

Static cornering light (cornering light) and driving light assist: Check function ⇒ page 43

Copyright by Volkswagen AG. Volkswagen AG does not guarantee or accept any liability with respect to the correctness of information in this document. Copyright by Volkswagen AG. Distributed by copyright. Copying of private or commercial purposes, in part or in whole, is not permitted unless authorised by Volkswagen AG.

Downloaded from www.Manualslib.com manuals search engine

4.1 Removable towing bracket: Check and clean if necessary

This chapter describes how to check and repair a removable towing bracket.

Note

Note that checking towing bracket is included in the respective service. However, a repair is charged separately and must be required by the customer.

Check procedure

– Remove cover -1-.

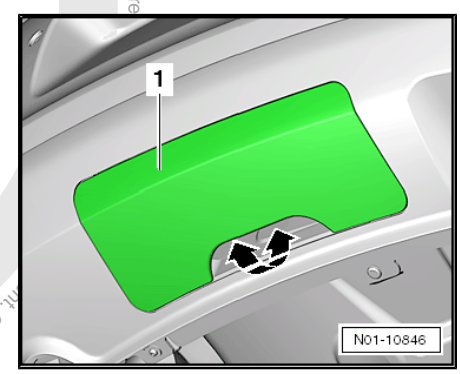

– Pull off protective cap -1- from ball head mounting -2-.
– Insert ball head into mounting.

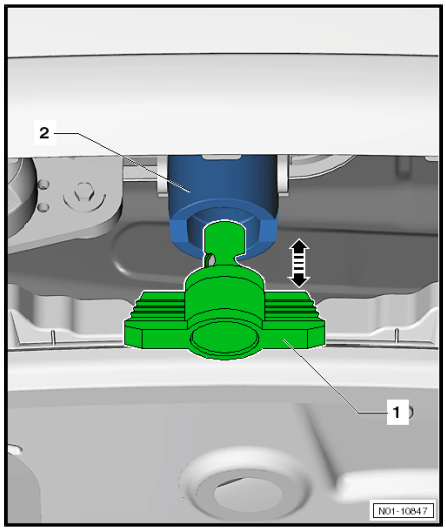

After ball head has been inserted, green mark on hand wheel must be aligned with white mark on ball head. Hand wheel must be entirely in contact. Afterwards, it must be possible to close the towing bracket lock by removing the key. If this is not possible, the following repair procedure must be performed.

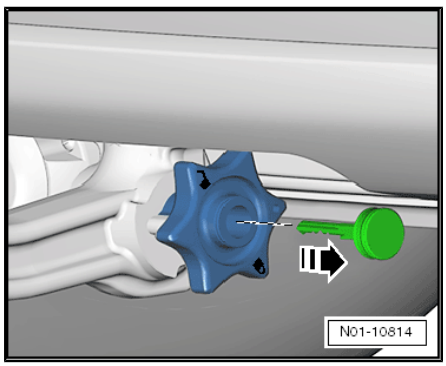

Note

If a repair has to be performed, it has only to be in agreement with the customer. A repair must be charged separately.

Repair procedure:

Downloaded from www.Manualslib.com manuals search engine

– Check contact surfaces -arrows- of ball head mounting for corrosion.
– If contact surfaces are corroded, eliminate corrosion with a triangular scraper and clean the treated areas with silicone remover.
– Apply a thin coat of lubricating paste G 000 650 or G 000 150 on cleaned surfaces.

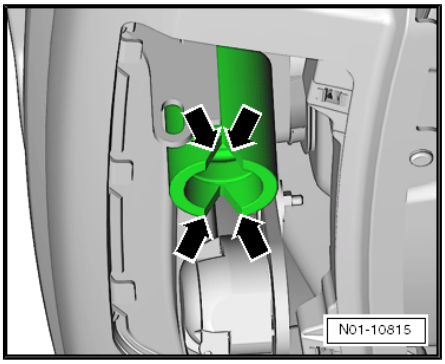

– Check contact surfaces -arrows- of ball head for corrosion.
– If contact surfaces are corroded, eliminate corrosion with a triangular scraper and clean the treated areas with silicone remover.
– Apply a thin coat of lubricating paste G 000 650 or G 000 150 on cleaned surfaces.
– Check again ball head seat in mounting ⇒ page 41 .

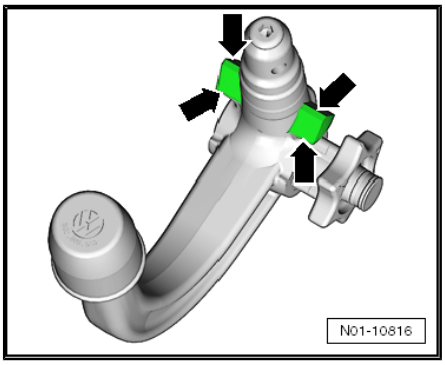

– After checking, fit protective cap -1- into ball head mounting -2-.

Note

If protective cap is damaged or not available, a new protective cap must be fitted to protect ball head mounting against corrosion ⇒ ETKA .

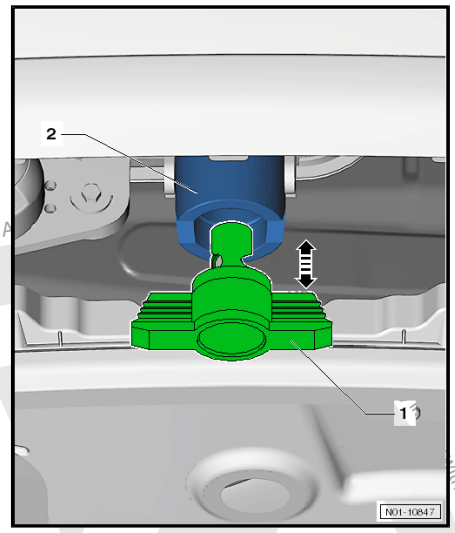

– Insert cover -1-.

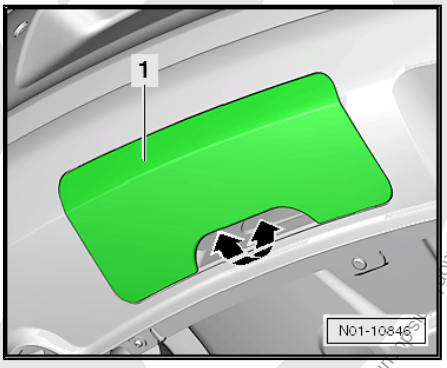

Protected by copyright. Copying for private or commercial purposes, in part or in whole, is not permitted unless authorised by Volkswagen AG. Copyright by Volkswagen AG. ith respect to the correctness of information

Downloaded from www.Manualslib.com manuals search engine

4.2 Swivel joints: Visual check

– Check swivel joint boots -arrow- for leaks and damage.

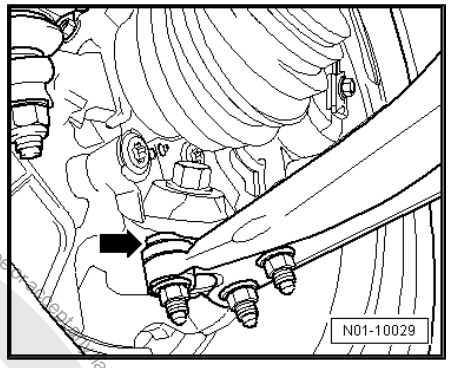

4.3 Driving light assist and cornering light: Check function

- Checking driving light assist ⇒ page 43
- Checking cornering light (static cornering light) ⇒ page 44

4.3.1 Checking driving light assist

Note

The driving light assist is also called automatic headlight control (AHC).

- Vehicle must be in natural daylight.

Checking in daylight or brightness

– Switch on ignition.

– Turn light switch -4- to position -2- for driving light assist.

The headlights may not light in brightness.

Checking at night or in darkness

- Ignition is switched on.
- Light switch is in position for driving light assist

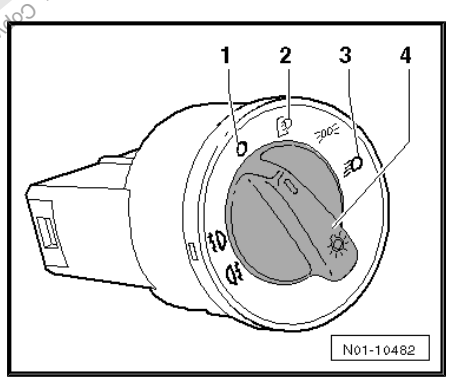

The rain and light sensor -G397- is secured on the interior mirror retainer.

The rain and light sensor -G397- is located centrally at top of windscreen -arrow-.

– Cover the securing area for interior mirror from outside of windscreen by hand or with a suitable object -arrow-.

This measures the light incidence and the headlights are switched on.

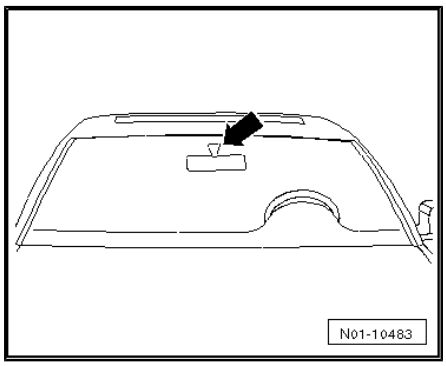

Protected copyright. Copyright by Volkswagen AG. Valid for commercial purposes, in part or in whole, is not permitted unless authorised by Volkswagen AG. Volkswagen AG does not guarantee or assume any liability with respect to the correctness of information in this document.

Downloaded from www.Manualslib.com manuals search engine

– Turn light switch -4- to position O -1- and switch off ignition.

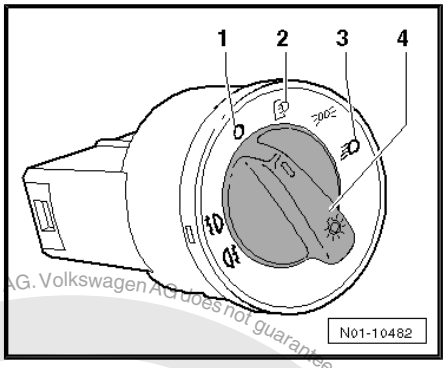

4.3.2 Checking cornering light (static cornering light)

- Vehicle stationary, steering in straight-ahead position

Note

- *Vehicles with cornering light (static cornering light) can be identified by an additional reflector -arrow- between turn signal -1- and dipped beam module -3-.*
- *The static cornering light only functions in conjunction with the dipped beam.*

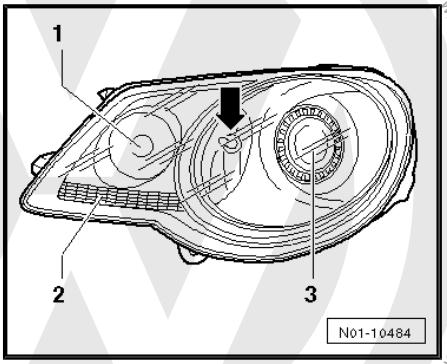

– Switch on ignition and dipped beam.

– Turn steering wheel from straight-ahead position one turn to the right and check if the cornering light bulb lights up in the right headlight.

– Turn steering wheel from straight-ahead position one turn to the left and check if the cornering light bulb lights up in the left headlight.

When the steering wheel is in straight-ahead position the cornering light must not light.

4.4 Automatic gearbox: Check ATF level, 09G gearbox

– Procedure: “Power transmission/automatic gearbox 09G” ⇒ Power transmission; Rep. Gr. 37 ; Checking ATF level and topping up “Checking ATF level and topping up”.

4.5 Automatic gearbox: Change ATF (09G gearbox)

– “Power transmission/automatic gearbox” ⇒ Power transmission/automatic gearbox; Rep. Gr. 37 ; Checking ATF level and topping-up/Draining and filling ATF “Checking ATF level and topping-up/Draining and filling ATF”

Countries with hot climate

Jordan	Egypt	Qatar
Syria	Kuwait	United Arab Emirates
Lebanon	Bahrain	Yemen
Palestine	Saudi Arabia	Iran
Iraq	Tunisia	Morocco

Protected by copyright. Copying for private or commercial purposes, in part or in whole, is not permitted unless authorised by Volkswagen AG. Volkswagen AG does not guarantee or accept any liability with respect to the correctness of information in this document. Copyright by Volkswagen AG.

Downloaded from www.Manualslib.com manuals search engine

Afghanistan	Turkey	Israel

4.6 Battery: Check battery terminal clamps for secure seating

Special tools and workshop equipment required

- Torque wrench -V.A.G 1331-

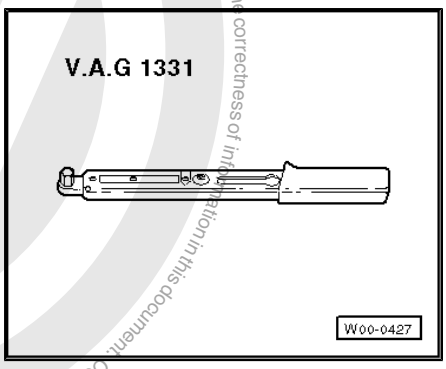

Note

- *A securely seated battery clamp ensures trouble free function and long service life of the battery.*
- *When securing the terminal clamp, ensure it is located fully on the battery terminal.*

Battery in engine compartment

Carry out the following procedure:

– Open battery cover, if fitted.

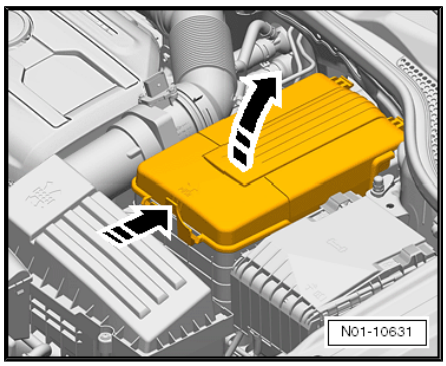

– Check whether battery clamps are secure on battery terminals by moving battery negative clamp and battery positive clamp back and forth.

WARNING

If the battery clamp is not seated securely on the positive terminal, first disconnect battery clamp from battery negative terminal to prevent possible accidents.

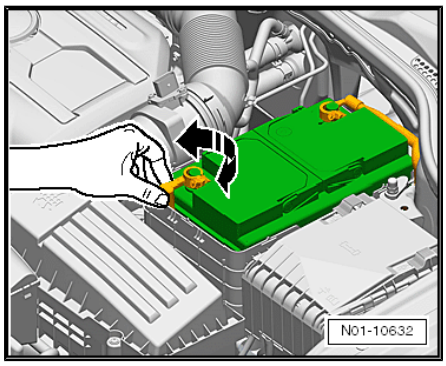

If the battery clamp is NOT seated securely on positive terminal:

Downloaded from www.Manualslib.com manuals search engine

– Loosen the -NEGATIVE- battery clamp and remove.

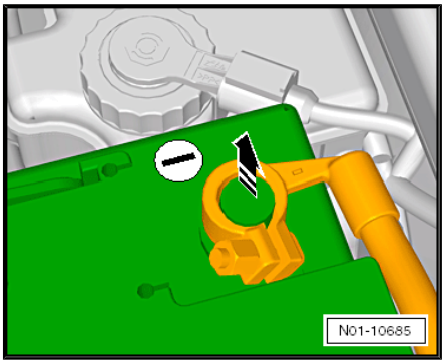

– Tighten the -POSITIVE- battery clamp to 9 Nm using torque wrench -V.A.G 1331- and ratchet -V.A.G. 1331/1- .

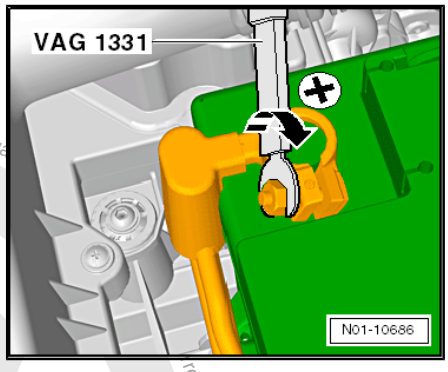

– Reconnect the -NEGATIVE- battery clamp to 9 Nm using torque wrench -V.A.G 1331- and ratchet -V.A.G. 1331/1- .

If the battery clamp on negative terminal is NOT seated securely:

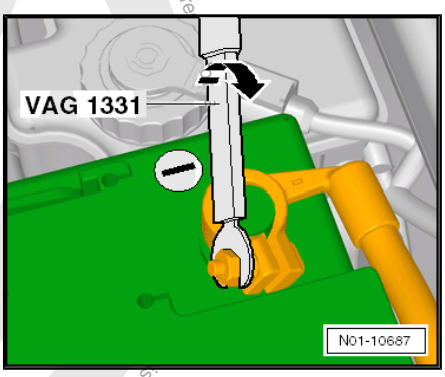

– Tighten the -NEGATIVE- battery clamp on battery terminal to 9 Nm using torque wrench -V.A.G 1331- and ratchet -V.A.G. 1331/1- .

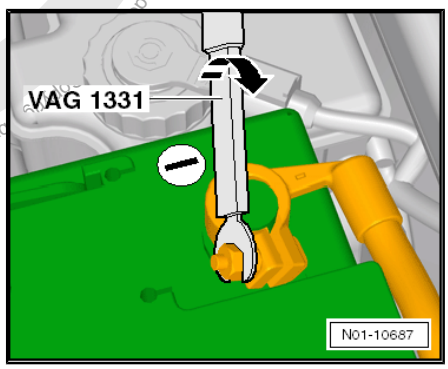

Protected by copyright. Copying for private or commercial purposes, in part or in whole, is not permitted unless authorised by Volkswagen AG. Volkswagen AG does not gua
by Volkswagen AG.

Downloaded from www.Manualslib.com manuals search engine

– Reinstall cover, if fitted.

After connecting battery perform the following work steps:

Procedure

Vehicle electrics → Electrical system ⇒ Rep. Gr. 27 → Disconnecting and connecting battery → Connecting battery → Work steps after connecting battery

For technical reasons it is possible that several cross references are not directed to the correct chapter. In this case select the procedure manually in the information.

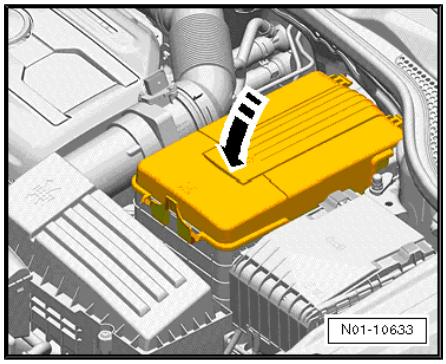

Battery in luggage compartment

Carry out the following procedure:

– Raise luggage compartment floor and secure with its appliance.

– Remove the right filler piece for luggage compartment floor with fitted tool.

The cover for battery housing is visible.

– Remove the 10 multi-point socket head bolts -arrows- and remove cover for battery housing -1-.

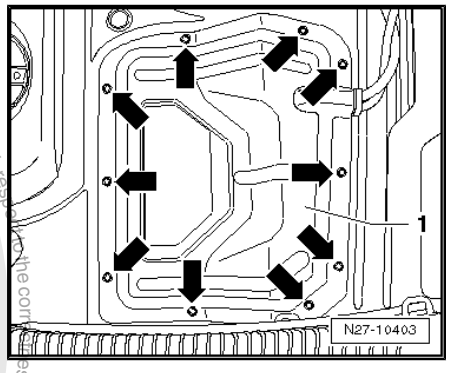

– Take out shaped component -arrow-.

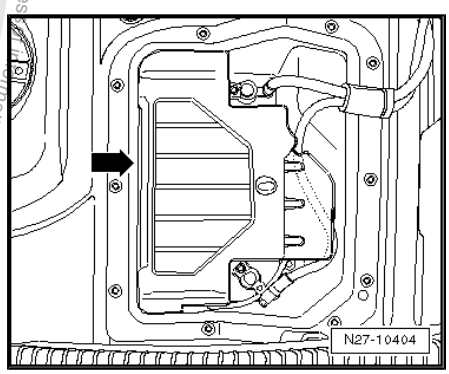

– Check whether battery clamps are secure on battery terminals by moving battery negative cable -2- and battery positive cable -1- back and forth.

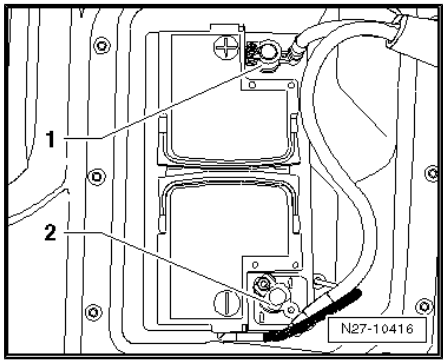

> ⚠ **WARNING**
>
> ***If the battery clamp is not seated securely on the positive terminal, first disconnect battery clamp from battery negative terminal to prevent possible accidents.***

If the battery clamp is not seated securely on positive terminal:

Protected by copyright. Copying for private or commercial purposes, in part or in whole, is not permitted without authorisation by Volkswagen AG. Volkswagen AG does not guarantee or accept any liability with respect to the correctness of information in this document. Copyright by Volkswagen AG.

Downloaded from www.Manualslib.com manuals search engine

– Disconnect battery terminal clamp -2- from battery negative terminal first.

– Tighten battery terminal clamp -1- on battery positive terminal to 6 Nm.

– Reconnect battery clamp -2- to battery negative terminal and tighten to 6 Nm.

If the battery clamp on negative terminal is not seated securely:

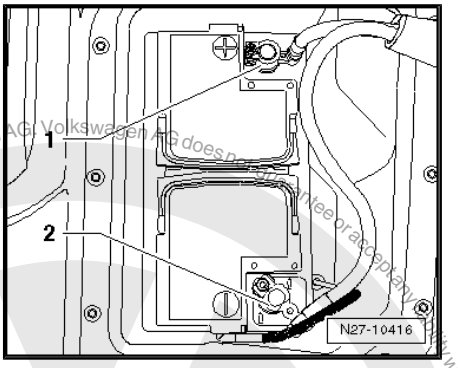

– Tighten battery clamp -2- on battery negative terminal to 6 Nm.

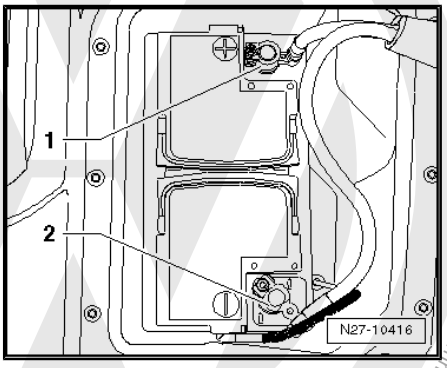

– Reinstall shaped component -arrow-.

– Install cover for battery housing and retighten the 10 multi-point socket head bolts

(M6 x 16) to 10 Nm.

– Place the right filler piece for luggage compartment floor with fitted tool in position provided, and fold luggage compartment floor back.

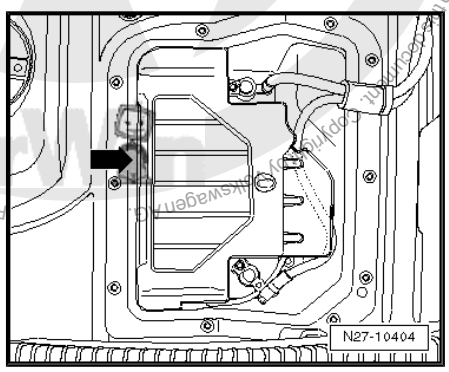

Note

After connecting the battery observe work steps: "Electrical system" ⇒ Electrical system; Rep. Gr. 27 ; Connecting battery "Connecting battery".

4.7 Battery: Check using battery tester with printer VAS 5097A or VAS 6161

Procedure: "Electrical system general information" ⇒ Electrical system general information; Rep. Gr. 27 ; Checking battery "Checking battery"

4.8 Checking tyres: Condition, wear pattern, tyre pressure, tread depth and age of tyres

Checking condition of tyre ⇒ page 49 .

Checking wear pattern ⇒ page 49 .

Tread depth (including spare wheel): Check ⇒ page 50

General notes ⇒ page 50 .

Downloaded from www.Manualslib.com manuals search engine

Checking tyre pressure using tyre inflator -VAS 5216- , correct if necessary, Golf 2004 ▸ ⇒ page 52 .

Checking tyre pressure using tyre inflator -VAS 5216- , correct if necessary, Golf Plus 2005 ▸ ⇒ page 51 .

Special tools and workshop equipment required

- Tyre inflator -VAS 5216-

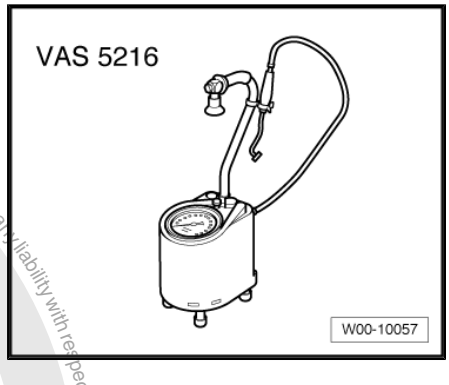

Protected by copyright. Copyright by Volkswagen AG. Volkswagen AG does not guarantee or accept any liability with respect to the correctness of information in this document. Copyright by Volkswagen AG. Protected by copyright. Copying for private or commercial purposes, in part or in whole, is not permitted unless authorised by Volkswagen AG.

4.8.1 Checking condition of tyre

WARNING

If damage is determined, always check to see if a new tyre should be fitted.

Tests at delivery inspection

– Check tyre treads and side walls for damage and remove foreign bodies such as, for example, nails or glass splinters.

Tests at service

– Check tyre treads and side walls for damage and remove foreign bodies such as, for example, nails or glass splinters.

– Check tyres for cupping, one-sided wear, porous side walls, cuts and punctures.

– Check tyre age. We recommend not to use any tyres older than 6 years. Inform customer!

4.8.2 Checking wear pattern

The wear pattern on the front tyres will indicate, for example, if toe and camber settings should be checked:

- Feathering on tread indicates incorrect toe setting.
- One-sided tread wear is mainly attributed to incorrect camber.

When wear of this nature is detected, determine cause by checking alignment (repair measure).

Downloaded from www.Manualslib.com manuals search engine

4.8.3 Tread depth (including spare wheel): Check

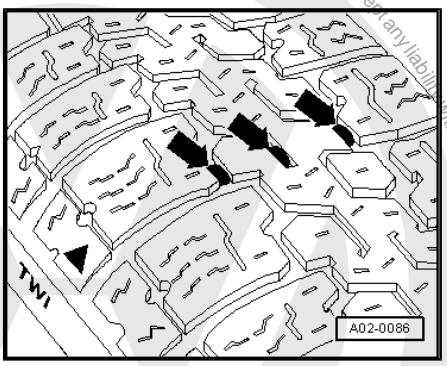

– Check tyre tread depth.

Minimum tread depth: 1.6 mm

Note

- *This figure may vary according to legislation in individual countries.*
- *The minimum tread depth is reached when the tyres have worn down level with the 1.6 mm high tread wear indicators -arrows- positioned at intervals around the tyre.*
- *If the tread depth is approaching the minimum allowed depth, inform the customer.*

4.8.4 General notes

WARNING

- ***For safety reasons, only tyres of same type and tread pattern should be fitted on a vehicle! Approved wheel and tyre combinations, e.g. ⇒ Running gear; Rep. Gr. 44 ; Golf from model year 2004 up to model year 2009***
- ***On four-wheel drive vehicles, tyres of the same type and tread pattern must be used. Otherwise the centre differential may be damaged.***

Note

- *The tyre pressure table is valid for all factory fitted tyre sizes.*
- *The pressures in the table apply to cold tyres. Do not reduce increased pressures of warm tyres.*
- *Tyre pressures for the relevant model can also be found on a sticker attached to the inside of fuel tank flap.*
- *Adjust the tyre pressure to suit the vehicle load.*
- *The spare wheel should have the highest tyre pressure determined for the vehicle.*
- *Please note that basic setting should be performed on vehicles with tyre pressure monitoring after every pressure change* *⇒ page 116* .

Protected by copyright. Copying for private or commercial purposes, in part or in whole, is not permitted unless authorised by Volkswagen AG. Volkswagen AG does not guarantee or accept any liability with respect to the correctness of information in this document. Copyright by Volkswagen AG.

Downloaded from www.Manualslib.com manuals search engine

Winter tyres

Note

- *Important information on recommended winter tyres can be found in Wheels and Tyres Guide - Standard → ⇒ Running gear; Rep. Gr. 44 ; Recommended winter tyres*
- *If winter tyres are fitted, a sticker, visible for the customer and indicating the speed limit, must be applied in the in interior of the vehicle.*
- *For winter tyres the tyre pressures for standard tyres are valid.*

Note

For technical reasons it is possible that several cross references are not directed to the correct chapter. In this case select the procedure manually in the information.

4.8.5 Tyre pressures for Golf Plus 2005 ▸

Check tyre pressure using tyre inflator -VAS 5216- , correct if necessary.

Petrol engines ⇒ page 51

Diesel engines ⇒ page 51

Golf Plus with petrol engines

Petrol engines	Tyre pressures for Golf Plus from 2005			
Output	Half payload bar/psi		Full payload bar/psi	
	front	rear	front	rear
1.4 l 55 kW, 90 kW and 118 kW	2.2/31	2.2/31	2.4/34	2.9/41
1.6 l 66 kW, 75 kW and 85 kW	2.2/31	2.2/31	2.4/34	2.9/41
2.0 l 110 kW	2.2/31	2.2/31	2.4/34	2.9/41
Temporary spare wheel (collapsible spare wheel)	4.2/60	4.2/60	4.2/60	4.2/60

Golf Plus with diesel engines

Diesel engines	Tyre pressures for Golf Plus from 2005			
Output	Half payload bar/psi		Full payload bar/psi	
	front	rear	front	rear
1.9 l 77 kW, 85 kW and 96 kW TDI	2.2/31	2.2/31	2.4/34	2.9/41
2.0 l 55 kW SDI	2.2/31	2.2/31	2.4/34	2.9/41
2.0 l 103 kW TDI	2.3/33	2.3/33	2.5/36	3.0/43
Temporary spare wheel (collapsible spare wheel)	4.2/60	4.2/60	4.2/60	4.2/60

Protected by copyright. Copyright by Volkswagen AG. Volkswagen AG does not guarantee or accept any liability with respect to the correctness of information in this document. Copying for private or commercial purposes, in part or in whole, is not permitted unless authorised by Volkswagen AG.

Downloaded from www.Manualslib.com manuals search engine

4.8.6 Tyre pressures for Golf 2004 ▸

Check tyre pressure using tyre inflator -VAS 5216- , correct if necessary.

Petrol engines ⇒ page 52

Diesel engines ⇒ page 52

Golf with petrol engines

Petrol engines	Tyre pressures for Golf from 2004			
Output	Half payload bar/psi		Full payload bar/psi	
	front	**rear**	**front**	**rear**
1.4 l 55 kW, 59 kW, 66 kW and 90 kW	2.0/29	2.0/29	2.3/33	2.8/40
1.4 l 103 kW	2.2/31	2.2/31	2.4/34	2.9/41
1.4 l 125 kW	2.3/33	2.3/33	2.5/36	3.0/43
1.6 l 75 kW and 85 kW	2.0/29	2.0/29	2.3/33	2.8/40
2.0 l 110 kW	2.1/30	2.1/30	2.3/33	2.8/40
2.0 l 147 kW and 169 kW	2.4/34	2.4/34	2.6/37 (not NAR)	3.0/43 (not NAR)
2.0 l 147 kW and 169 kW 225/45 R 17 91 H	2.3/33	2.3/33	---	---
2.0 l 147 kW and 169 kW 225/40 R 18 92 H (XL)	2.6/38	2.6/38	---	---
2.5 l 110 kW and 125 kW	2.3/34	2.3/34	---	---
2.5 l 110 kW and 125 kW only 225/40 R 18 92 H (XL)	2.6/38	2.6/38	---	---
2.0 l 110 kW 4motion	2.2/31	2.2/31	2.4/34	2.9/41
2.0 l 147 kW 4motion	2.3/33	2.3/33	2.5/36	3.0/43
3.2 l 184 kW	2.8/40	2.8/40	3.0/43	3.2/47
Temporary spare wheel (collapsible spare wheel)	4.2/60	4.2/60	4.2/60	4.2/60

Golf with diesel engines

Diesel engines	Tyre pressures for Golf from 2004			
Output	Half payload bar/psi		Full payload bar/psi	
	front	**rear**	**front**	**rear**
1.9 l 66 kW, 85 kW and 96 kW TDI	2.1/30	2.1/30	2.3/33	2.8/40
1.9 l 77 kW TDI	2.2/31	2.2/31	2.4/34	2.9/41
2.0 l 55 kW SDI	2.0/29	2.0/29	2.3/33	2.8/40
2.0 l 96 kW and 103 kW TDI	2.3/33	2.3/33	2.5/36	3.0/43
2.0 l 118 kW and 125 kW TDI	2.4/34	2.4/34	2.6/37	3.0/43
1.9 l 77 kW and 103 kW TDI 4motion	2.3/33	2.3/33	2.5/36	3.0/43
Temporary spare wheel (collapsible spare wheel)	4.2/60	4.2/60	4.2/60	4.2/60

Protected by copyright. Copyright by Volkswagen AG. Volkswagen AG does not guarantee or accept any liability with respect to the correctness of information in this document. Copyright by Volkswagen AG. Copying for private or commercial purposes, in part or in whole, is not permitted unless authorised by Volkswagen AG.

Downloaded from www.Manualslib.com manuals search engine

4.9 Brake and clutch system: Change brake fluid

Instructions for use and safety ⇒ page 53 .

Brake fluid specification ⇒ page 53

Changing brake fluid ⇒ page 53 .

4.9.1 Instructions for use and safety

Note

- *From model year 2006 a new brake fluid will be introduced.*
- *The new brake fluid can also be used for older vehicles.*
- *For this purpose it can be mixed with the previous brake fluid.*

WARNING

- *Brake fluid must under no circumstances come into contact with fluids containing mineral oils (oil, petrol, cleaning solutions). Mineral oils will damage seals and sleeves of brake system.*
- *Brake fluid is poisonous. In addition, due to its corrosive nature, it must not come into contact with paint.*
- *Brake fluid is hygroscopic, i.e. it attracts moisture from the surrounding air and therefore must always be stored in air-tight containers.*
- *Wash away spilt brake fluid using plenty of water.*
- *Do not reuse extracted (used) brake fluid.*
- *Observe disposal regulations!*

4.9.2 Brake fluid specification

Permissible specifications:

- Brake fluid conforming to US standard FMVSS 116 DOT 4 (previous brake fluid)
- Brake fluid conforming to VW standard VW 501 14 (new brake fluid).

4.9.3 Changing brake fluid

Special tools and workshop equipment required

- Brake filling and bleeding equipment -VAS 5234-

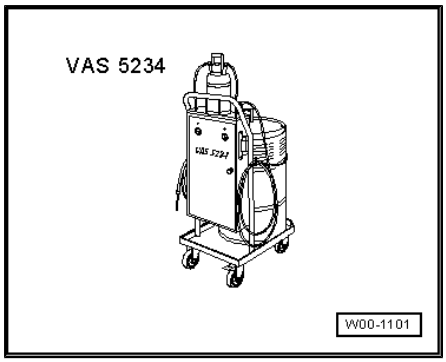

Downloaded from www.Manualslib.com manuals search engine

- Brake bleeding wrench -VAS 5519-
- Brake bleeding tool -VAS 6564-

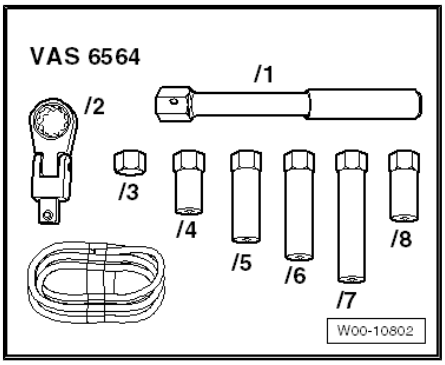

– Unscrew cap -1- from brake fluid reservoir.

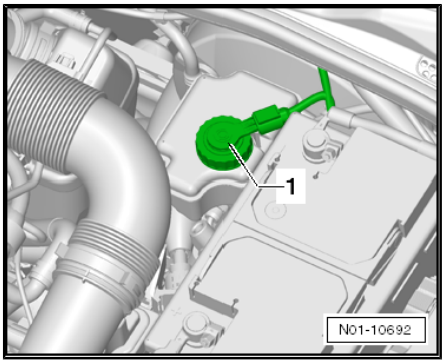

– Extract as much brake fluid as possible using suction hose from brake filling and bleeding equipment -VAS 5234- .

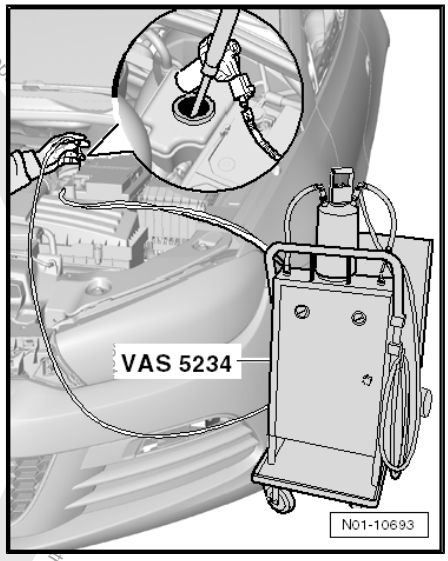

Note

The strainer in brake fluid reservoir must not be removed.

WARNING

Do not reuse extracted brake fluid!

Protected by copyright. Copying for private or commercial purposes, in part or in whole, is not permitted unless authorised by Volkswagen AG. Volkswagen AG does not guarantee or accept any liability with respect to the correctness of information in this document. Copyright by Volkswagen AG.

Downloaded from www.Manualslib.com manuals search engine

– Screw adapter -1- onto brake fluid reservoir.

Observe ⇒ operating instructions for -VAS 5234- !

– Adjust correct pressure on brake filling and bleeding equipment -VAS 5234- : Running gear, brake systems ⇒ Running gear, brake systems; Rep. Gr. 47 ; Bleeding brake system → Bleeding brake system.

– Connect filling hose from brake filling and bleeding equipment -VAS 5234- to adapter -1-.

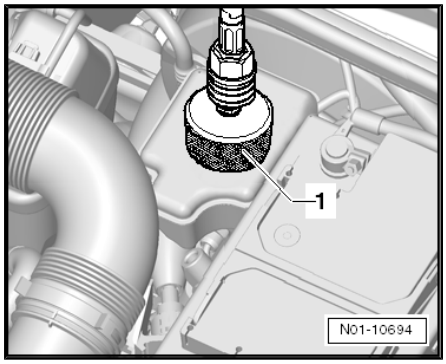

Note

Use an appropriate bleed hose. It must seat tightly on bleeder valve so that no air can enter the brake system.

– Remove cover cap -1- from bleeder valve of front left brake caliper.

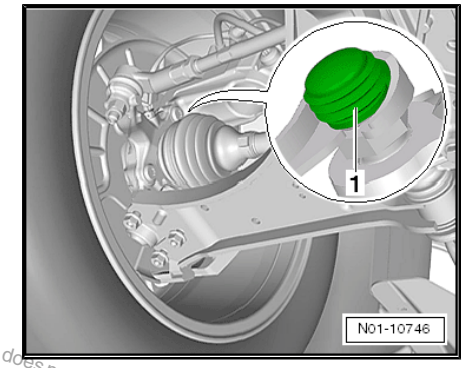

– Push collector bottle bleeder hose -1- onto front left bleeder valve, open bleeder valve and let appropriate quantity of brake fluid run out (see table). Close bleeder valve. Torque: Running gear → Brake systems ⇒ Rep. Gr. 47 → Repairing front brake caliper.

– Fit again cover cap on bleeder valve of front left brake caliper.

Repeat procedure on right-hand side of vehicle at front.

– If necessary, unscrew both wheels on rear axle to reach the bleeder valve.

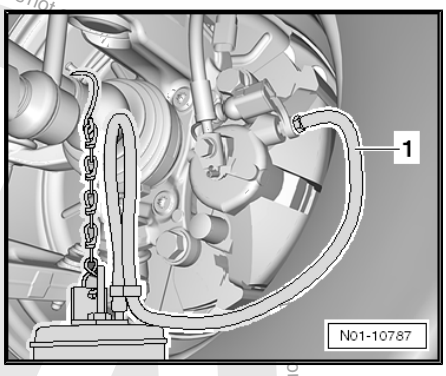

– Remove cover cap -1- from bleeder valve of rear left brake caliper.

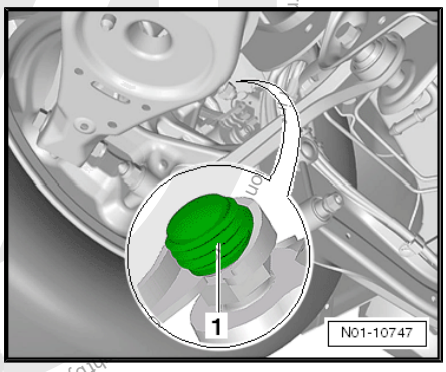

Protected by copyright. Copying for private or commercial purposes, in part or in whole, is not permitted unless authorised by Volkswagen AG. Volkswagen AG does not

Downloaded from www.Manualslib.com manuals search engine

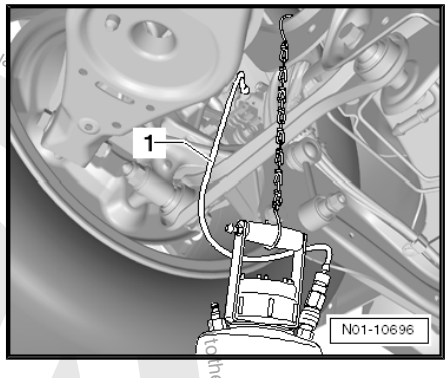

– Push collector bottle bleeder hose -1- onto rear left bleeder valve.
– Open bleeder valve and let appropriate quantity of brake fluid run out (see table). Close bleeder valve. Torque: Running gear → Brake systems ⇒ Rep. Gr. 47 → Repairing rear brake caliper.
– Fit again cover cap on bleeder valve of rear left brake caliper.
– Repeat procedure on right-hand side of vehicle at rear.

For vehicles with manual gearbox

Remove air filter housing.

Procedure

– Power unit ⇒ Rep. Gr. 23 → Diesel direct injection system → Assembly overview - air filter

Or

– Power unit ⇒ Rep. Gr. 24 → Injection system → Removing and installing air filter

Note

For technical reasons it is possible that several cross references are not directed to the correct chapter. In this case select the procedure manually in the information.

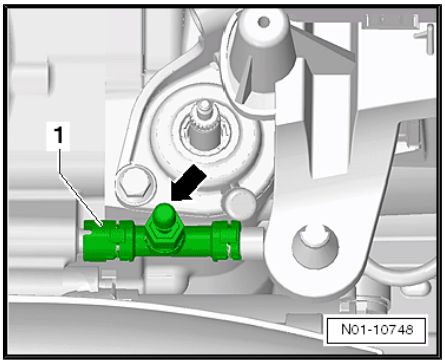

– Push bleeder hose onto bleeder valve -arrow- of clutch slave cylinder -1-.
– Open valve and allow approx. 100 ml of brake fluid to flow out.
– Close valve and depress clutch pedal 10 to 15 times quickly in succession.
– Open valve again and allow approx. 50 ml of brake fluid to flow out.
– Close valve, remove bleeder hose and depress clutch pedal several times.
– Install air filter housing accordingly in reverse order.

Sequence and quantity of brake fluid

Sequence bleeder valves:	Brake fluid quantity which must flow out of bleeder valves:
Brake caliper	
Front left	0.20 litre
Front right	0.20 litre
Wheel brake cylinder/brake caliper	
Rear left	0.30 litre
Rear right	0.30 litre
Clutch slave cylinder	0.15 litre

Total quantity: approx. 1.15 litre

– Set fill lever of brake filling and bleeding equipment -VAS 5234- to position “B” (see operating instructions).
– Remove filler hose from adapter.

Downloaded from www.Manualslib.com manuals search engine

– Unscrew adapter from brake fluid reservoir.
– Check brake fluid level and correct if necessary. It must be between position -1- and -2-.

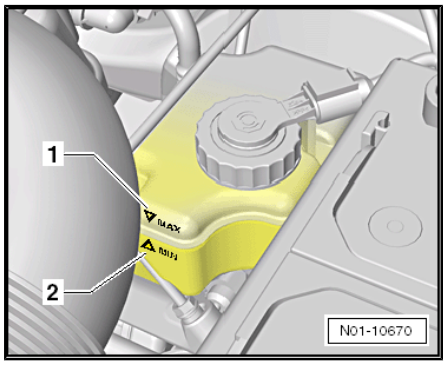

– Screw on cap -1- of brake fluid reservoir.
– Perform functional check during road test.
– If necessary, reinstall rear wheels ⇒ page 112 .

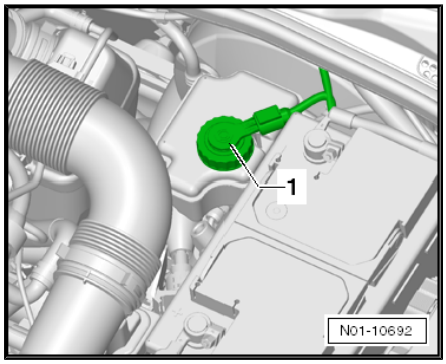

4.10 Brake fluid level: Check

Brake fluid level at delivery inspection:

Brake fluid level at inspection service:

> ⚠ **WARNING**
>
> ***If level is below MIN. marking -2-, brake system should be checked before fluid is added (repair measure).***

Instructions for use and safety ⇒ page 53

Brake fluid specification ⇒ page 53

Procedure, brake fluid level (dependent upon lining/pad wear): Check ⇒ page 58

Protected by copyright. Copyright for private or commercial purposes, in part or in whole, is not permitted unless authorised by Volkswagen AG. Volkswagen AG does not guarantee or accept any liability with respect to the correctness of information in this document. Copyright by Volkswagen AG.

Downloaded from www.Manualslib.com manuals search engine

4.10.1 Brake fluid level (dependent upon lining/ pad wear): Check

Brake fluid level at delivery inspection:

– For delivery inspection, fluid must be at MAX. marking -1-.

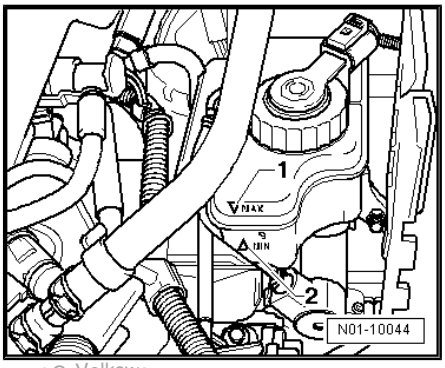

Note

In order that brake fluid does not overflow the reservoir, MAX marking -1- must not be exceeded.

Brake fluid level at inspection service:

The fluid level must always be judged in conjunction with lining/ pad wear.

When vehicle is in use, fluid level tends to drop slightly due to lining/pad wear and automatic adjustment.

- Recommended brake fluid level, if brake pads are almost at wear limit:

"At MIN. marking or just above" -2-, "REPLENISHING IS NOT REQUIRED".

- Recommended brake fluid level when brake pads are new or well within wear limit:

"Between MIN. and MAX. marking".

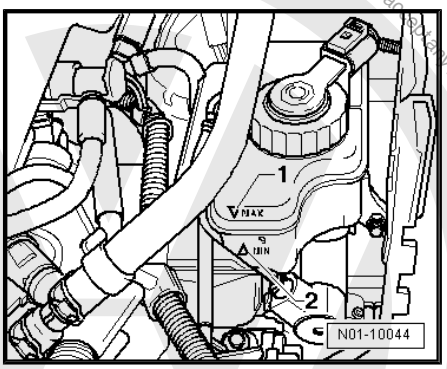

4.11 Brake system and shock absorbers: Perform visual check for leaks and damage

Check following components for leaks and damage:

- ♦ Brake master cylinder
- ♦ Brake servo (for anti-lock brake system: hydraulic unit)
- ♦ Brake pressure regulator and
- ♦ Brake calipers
- ♦ Presence of dust caps on brake fluid bleeder valves
- – Ensure that brake hoses are not twisted.
- – Ensure that brake hoses do not touch any vehicle components when steering is at full lock.
- – Check brake hoses for porosity or brittleness.
- – Check brake hoses and lines for chafing.
- – Check brake connections and fastenings for correct seating, leaks and corrosion.

Protected by copyright. Copying for private or commercial purposes, in part or in whole, is not permitted unless authorised by Volkswagen AG. Volkswagen AG does not guarantee or accept any liability with respect to the correctness of information in this document. Copyright by Volkswagen AG.

Downloaded from www.Manualslib.com manuals search engine

WARNING

Faults found must always be rectified (repair measure).

4.12 Front and rear brake pads/linings: Check thickness

Special tools and workshop equipment required

- Torque wrench -V.A.G 1332-

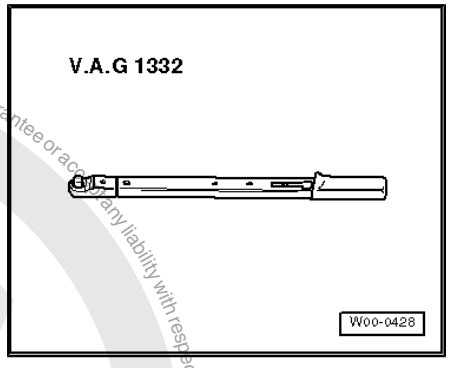

- Electric hand torch and mirror

Carry out the following procedure:

The adapter to loosen and tighten anti-theft wheel bolts is in the vehicle tool kit ⇒ page 112 .

4.12.1 Front brake pads:

– For better evaluation of remaining pad thickness, remove the wheel on the side where the brake pad wear indicator is installed.

– Pull off wheel bolt covers if necessary ⇒ page 112 .

– Mark position of wheel relative to brake disc.

– Unbolt wheel bolts and remove wheel.

Protected by copyright. Copying for private or commercial purposes, in part or in whole, is not permitted unless authorised by Volkswagen AG. Volkswagen AG does not guarantee or accept any liability with respect to the correctness of information in this document. Copyright by Volkswagen AG.

Downloaded from www.Manualslib.com manuals search engine

– Measure thickness of inner and outer pads.

a - Pad thickness “without” backplate

Wear limit: 2 mm

The brake pads have reached their wear limit at a pad thickness of 2 mm (without backplate) and must be renewed (repair measure). Inform customer!

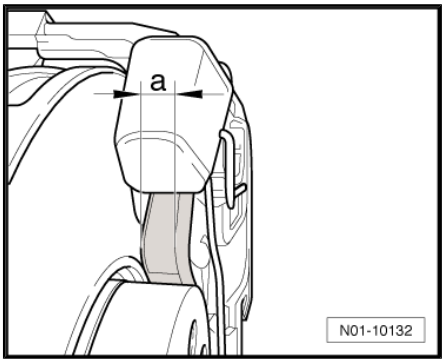

Note

When replacing brake pads, always check brake discs as well for wear! Checking and if necessary replacing the brake discs is a repair measure.

– Check brake disc for wear: “Running gear/Brake systems” ⇒ Brake system; Rep. Gr. 46 ; Repairing front brakes “Repairing front brakes”

– Install wheel in marked position.

– Tighten wheel bolts diagonally and alternately. Torque setting ⇒ page 112

– Place adapter in vehicle tool kit after completing work.

– Reinstall wheel bolt covers if necessary.

4.12.2 Rear brake pads:

– Illuminate area behind hole in wheel using an electric hand torch.

– Determine thickness of outer pad by checking visually.

– Illuminate inner pad with an electric hand torch and mirror.

– Determine thickness of inner pad by checking visually.

a - Inner and outer pad thickness without backplate

Wear limit: 2 mm

The brake pads have reached their wear limit at a pad thickness of 2 mm (without backplate) and must be renewed (repair measure). Inform customer!

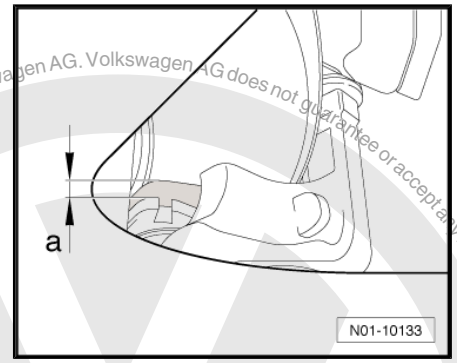

Note

When replacing brake pads, always check brake discs as well for wear! Checking and if necessary replacing the brake discs is a repair measure.

– Check brake disc for wear: “Running gear/Brake systems” ⇒ Running gear; Rep. Gr. 46 ; Repairing rear brakes “Repairing rear brakes”

4.13 Checking diesel particulate filter

Note

When checking the diesel particulate filter the ash mass limit value is read.

– Connect vehicle diagnostic tester ⇒ page 32 .

Protected by copyright. Copying for private or commercial purposes, in part or in whole, is not permitted unless authorised by Volkswagen AG. Volkswagen AG does not guarantee or accept any liability with respect to the correctness of information in this document. Copyright by Volkswagen AG.

Downloaded from www.Manualslib.com manuals search engine

– Switch on ignition.
– Touch the field or button on the screen for “GUIDED FUNCTIONS”.

If the display is not as shown in the procedure: ⇒ Operating instructions for vehicle diagnostic tester

– Confirm with [>] button.
– Select one after the other:
- Brand
- Type
- Model year
- Engine code

– Confirm vehicle identification.
– Select vehicle system “Engine”.
– Select “Checking ash mass of diesel particulate filter”.

Follow instructions on display.

– End test.
– Switch off ignition and separate diagnostic connections.

4.14 6-speed dual clutch gearbox (DSG) 02E: Change oil and filter

Note

For the 7-speed dual clutch gearbox changing oil and filter is not necessary.

– Procedure: “Power transmission/Dual clutch gearbox” ⇒ Power transmission; Rep. Gr. 34 ; Changing oil and filter “Changing oil and filter”.

4.15 Electric windows: Check positioning (open and close functions)

Note

The automatic opening and closing features for the electric windows do not function after disconnecting and reconnecting the battery. Therefore, with immediate effect, before a new vehicle is delivered, the window adjusters must be reactivated. Once the windows have been reactivated, the battery must not be disconnected again.

WARNING

After batteries have been disconnected and reconnected the roll-back function of the electric window regulators is disabled. Severe pinching injuries could result!

Carry out the following procedure to reactivate the electric window automatic functions:

Protected by copyright. Copying for private or commercial purposes, in part or in whole, is not permitted unless authorised by Volkswagen AG. Volkswagen AG does not guarantee or accept any liability with respect to the correctness of information in this document. Copyright by Volkswagen AG.

Downloaded from www.Manualslib.com manuals search engine

Note

The following work description applies to the front left window regulator. Reactivate the other window automatic functions in the same manner by operating the respective switch in the driver door.

– Switch on ignition.
– Close all doors and windows completely.
– Hold the front left side window in “closed” position, by pulling and holding switch for longer than 1 second.
– Pull switch again for 1 second. The side window must now go up or down by itself when switch is briefly pulled or pressed.
– Switch off ignition.

4.16 Vehicle system test: Perform test

– Connect vehicle diagnostic tester ⇒ page 32 .
– Switch on ignition.
– Select operating mode “Guided fault finding” on display.
– Then perform vehicle identification on vehicle diagnostic tester .

The programme now automatically performs a vehicle system test and reads all control units available for this vehicle type.

– Press [>] button.

Now all faults are listed.

Note

- *At this point it is useful to change to operating mode guided functions to carry out further operations with diagnostic tester and to prevent a second vehicle identification on vehicle diagnostic tester .*
- *To do this, press button operating mode and then guided functions.*
- *For further procedure see respective work descriptions.*
- *To return to guided fault finding, press button operating mode and then guided fault finding.*

Caution

The vehicle must always be delivered to the customer with fault memory cleared.

Static faults

If one or more static faults are found in the fault memory, we recommend in agreement with the customer to rectify these faults using guided fault finding.

Sporadic faults

If only sporadic faults or notes are stored in the fault memory and the customer has no complaints in conjunction with the electronic vehicle system, clear fault memory.

Downloaded from www.Manualslib.com manuals search engine

– Press [>] button again to reach the test plan.

– Now finish guided fault finding using GoTo button and then End.

All fault memories are read again.

Now it is shown on display that all sporadic faults have been cleared, the diagnosis log is sent “online” automatically.

The vehicle system test is completed.

4.17 Front passenger front airbag: Check key switch and “On/Off function”

Front passenger front airbag: Check key switch and “On/Off function”, Golf 2004 ▸ ⇒ page 63 .

Front passenger front airbag: Check key switch and “On/Off function”, Golf Plus 2005 ▸ ⇒ page 64 .

Protected by copyright. Copy for private or commercial purposes, in part or in whole, is not permitted unless authorised by Volkswagen AG. Volkswagen AG does not guarantee or accept any liability with respect to the correctness of information in this document. Copyright by Volkswagen AG.

Note

- *There are vehicles which are fitted with automatic passenger airbag deactivation (e.g. vehicles for the North American market). This is performed by a seat occupancy recognition and not manually by the key switch.*
- *There are also vehicles which are not fitted with seat occupancy recognition and manual passenger airbag deactivation. In this case the airbag can only be deactivated using vehicle diagnostic tester .*

4.17.1 Golf 2004 ▸

Note

The “Airbag ON/OFF” switch is located in the glove box.

Front passenger front airbag: Check key switch and “On/Off function”

– Using vehicle key, turn key switch to position “Airbag Off” -arrow-. The key slot must point in the direction of travel (forwards).

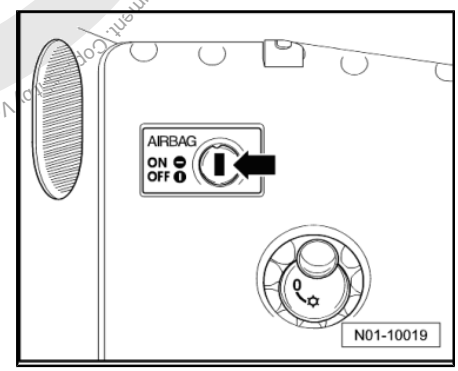

Downloaded from www.Manualslib.com manuals search engine

– Switch on ignition. Warning lamp “passenger airbag off” -arrow- must also light up after self-test (passenger airbag de-activated).
– Switch off ignition.

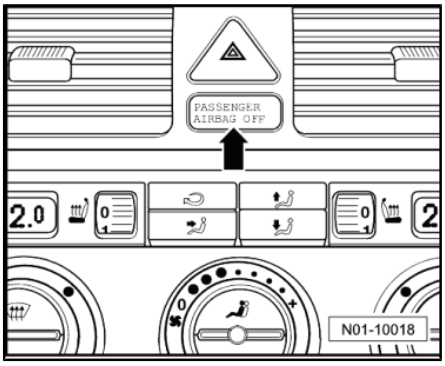

– Using vehicle key -arrow-, turn key switch to position “Airbag ON”. The key slot must be horizontal (point to sides of vehicle).

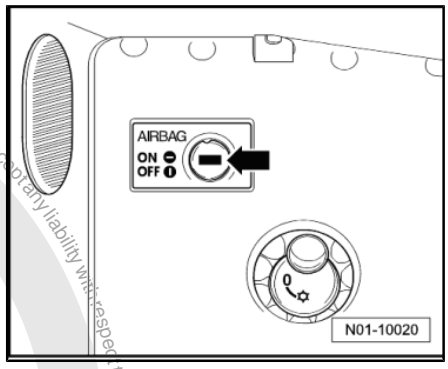

– Switch on ignition. Warning lamp “Passenger Airbag Off” -arrow- goes out after self-test (passenger airbag activated).
– Switch off ignition.

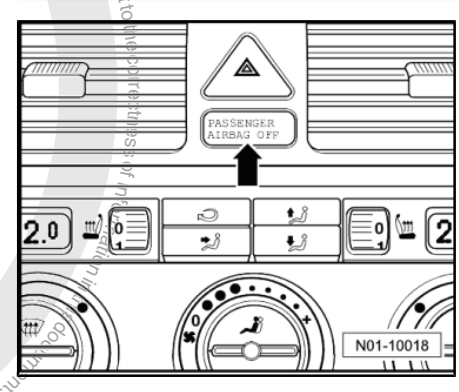

4.17.2 Golf Plus 2005 ▸

Note

The “Airbag ON/OFF” switch is located in the glove box.

Front passenger front airbag: Check key switch and “On/Off function”

– Using vehicle key, turn key switch -A- to position -arrow C- “Airbag Off”.

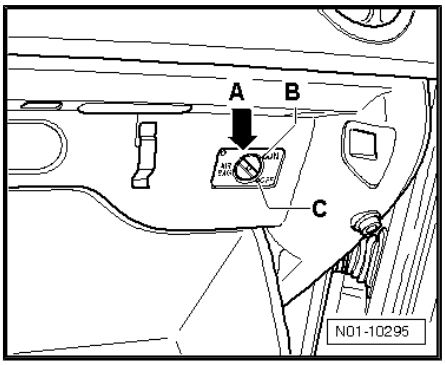

Protected by copyright. Copying for private or commercial purposes, in part or in whole, is not permitted unless authorised by Volkswagen AG. Volkswagen AG does not guarantee or accept any liability with respect to the correctness of information in this document. Copyright by Volkswagen AG.

Downloaded from www.Manualslib.com manuals search engine

– Switch on ignition.
– Warning lamp “Passenger airbag off” -arrow A- must also light up after self-test (passenger airbag deactivated).

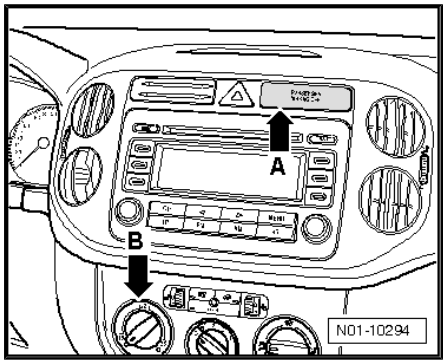

– Switch off ignition.
– Using vehicle key, turn key switch -arrow A- to position “Airbag ON” -arrow B-.

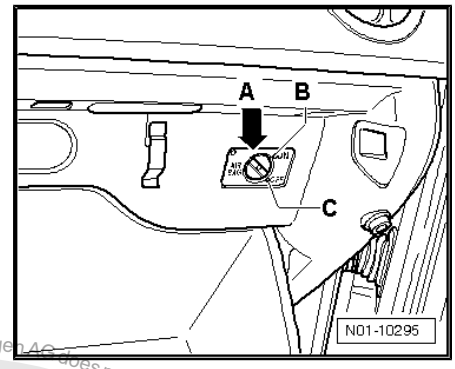

– Switch on ignition.
– Warning lamp “Passenger Airbag Off” -arrow A- goes out after self-test (passenger airbag activated).
– Switch off ignition.

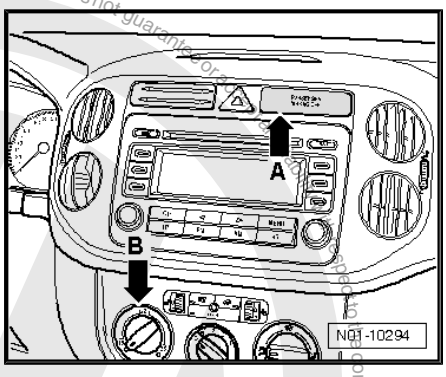

4.18 Protective bellows: Visual check

Carry out the following procedure:

– Check outer bellows and inner bellows -arrows- for leaks and damage.

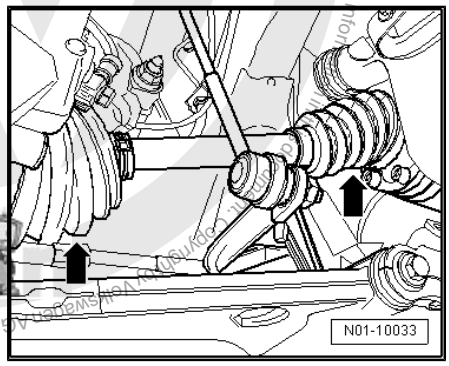

Protected by copyright. Copying for private or commercial purposes, in part or in whole, is not permitted unless authorised by Volkswagen AG. Volkswagen AG does not guarantee or accept any liability with respect to the correctness of information in this copy.

Downloaded from www.Manualslib.com manuals search engine

4.19 Haldex coupling (Golf 4motion): Change oil

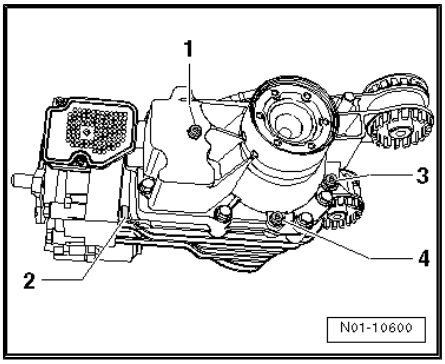

Note

- *On vehicles with Haldex coupling the drain plugs and sealing plugs of both systems are often interchanged, due to the integrated housing construction of Haldex coupling and final drive. Caution must be exercised during maintenance and servicing, as incorrect fitting can cause the Haldex coupling and the final drive to fail.*
- *The Haldex coupling and the final drive are one system with separate oil systems.*
- *-1- Plug for Haldex oil filler hole.*
- *-2- Drain plug for Haldex oil.*
- *-3- Plug for gear oil filler hole.*
- *-4- Drain plug for gear oil.*

Further information on arrangement of plugs ⇒ TPI 2017008

Special tools and workshop equipment required

- Torque wrench -V.A.G 1331-

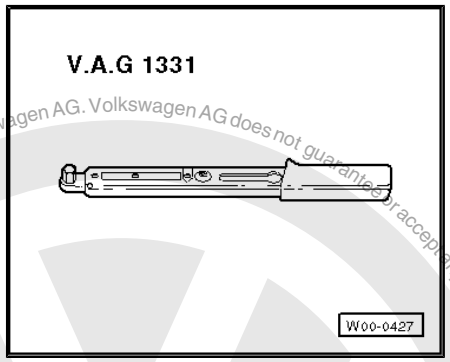

- Used oil collection and extraction unit -V.A.G 1782-

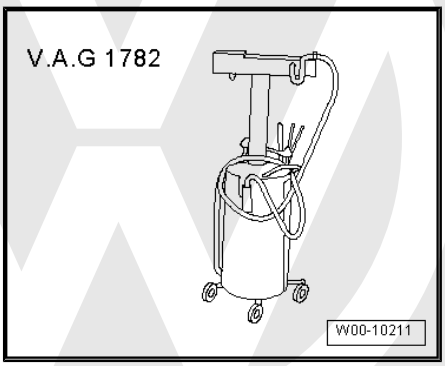

- Oil spill cloth -VAS 6204/1-

Protected by copyright. Copying for private or commercial purposes, in part or in whole, is not permitted unless authorised by Volkswagen AG. Volkswagen AG does not guarantee or accept any liability with respect to the correctness of information in this document. Copyright by Volkswagen AG.

Downloaded from www.Manualslib.com manuals search engine

Protected by copyright. Copying for private or commercial purposes, in part or in whole, is not permitted unless authorised by Volkswagen AG. Volkswagen AG does not guarantee or accept any liability with respect to the correctness of information in this document. Copyright by Volkswagen AG.

♦ Charging device for Haldex coupling 2 -VAS 6291-

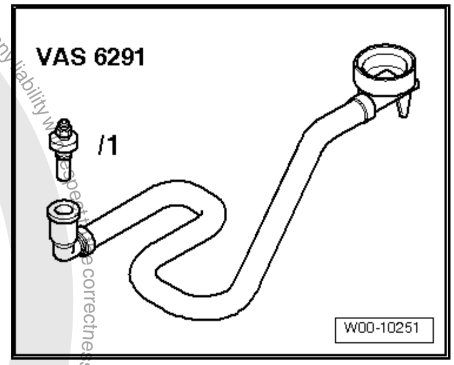

♦ Vehicle diagnostic, testing and information system -VAS 5051B-

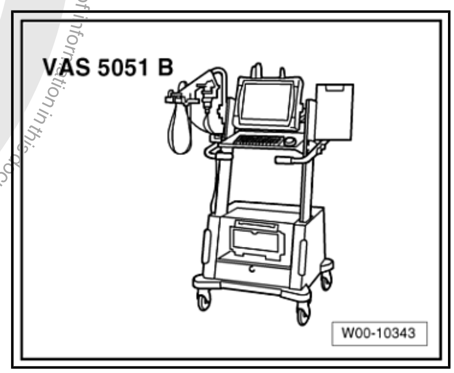

♦ Diagnostic cable -VAS 5051/6A-

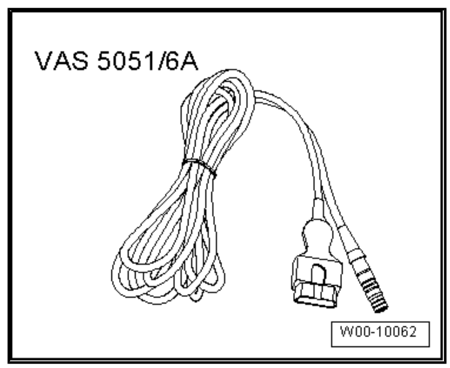

Procedure

– Raise vehicle with lifting platform and place used oil collection and extraction unit -V.A.G 1782- below Haldex coupling.

– Unscrew oil drain plug -A- and fully drain high performance oil.

– Screw in new drain plug ⇒ Parts catalogue with new seal. The drain plug is fitted with a secure seal.

Specified torque: 30 Nm

– Remove oil filler plug -B-.

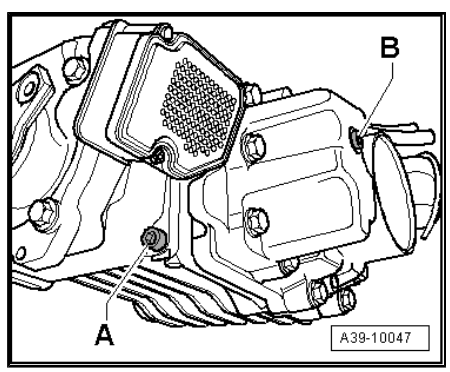

Downloaded from www.Manualslib.com manuals search engine

– Separate angled piece -B- from adapter -A- and screw adapter fully in oil filler hole.
– Reconnect angled piece and route hose above drive shaft to prevent sagging.
– The vehicle can be lowered as soon as the hose above the rear left wheel leads away from the vehicle.

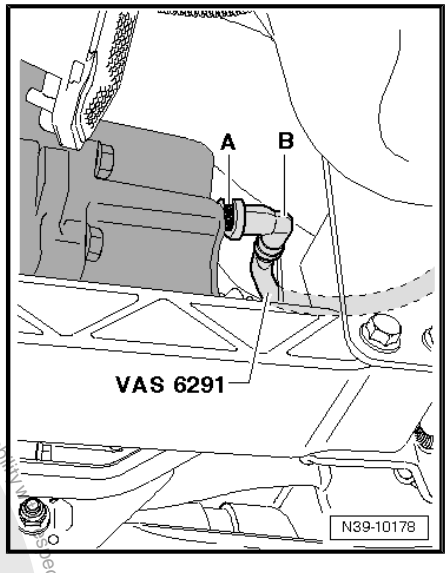

– Screw oil container -A- to charging device for Haldex coupling 2 -VAS 6291- with valve closed -arrow-.
– Open valve -arrow- and hold oil container as shown in the illustration.

Oil capacity according to maintenance: 0.65 l high performance oil for Haldex coupling -G 055 175- ⇒ Parts catalogue

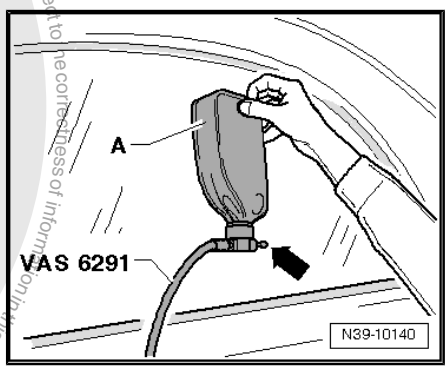

Protected by copyright. Copying for private or commercial purposes, in part or in whole, is not permitted unless authorised by Volkswagen AG. Volkswagen AG does not guarantee or accept any liability with respect to the correctness of information in this document. Copyright by Volkswagen AG.

Downloaded from www.Manualslib.com manuals search engine

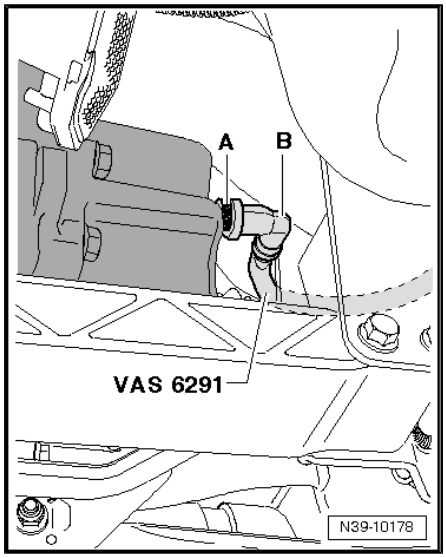

– Check for correct filling by raising the vehicle again, and check if oil has flown out of adapter -A-.
– If no oil has flown out, lower the vehicle again and continue with filling.
– As soon as oil has run out, hold the oil container below the height of the Haldex coupling, so that excessive oil can flow back from the line into the container.
– Remove charging device for Haldex coupling 2 -VAS 6291- and screw in oil filler plug.

Specified torque: 15 Nm

– Now check the correct oil level at prescribed temperature range.
– To do this, connect vehicle diagnostic tester ⇒ page 32 .
– Select one after the other:

- ♦ Vehicle self-diagnosis
- ♦ Running gear
- ♦ Four-wheel drive with Haldex coupling
- ♦ 01 - Systems capable of self-diagnosis
- ♦ Four-wheel drive Haldex
- ♦ Electrical components
- ♦ Oil temperature

The oil temperature must be 20...40 °C and can be reached by carrying out a road test.

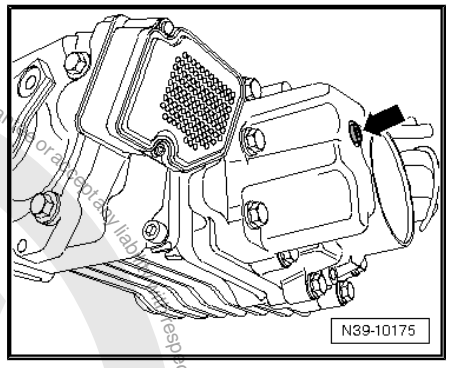

– Remove oil filler plug again -arrow-.

The oil level is correct when the Haldex coupling is filled to the lower edge of oil filler hole or at least 3 mm below oil filler hole.

– Use a new seal and tighten oil filler plug.

Specified torque: 15 Nm

4.20 Poly V-belt: Adjust tension on engines without automatic tensioning roller

Special tools and workshop equipment required

Protected by copyright. Copying for private or commercial purposes, in part or in whole, is not permitted unless authorised by Volkswagen AG. Volkswagen AG does not guarantee or accept any liability with respect to the correctness of information in this document. Copyright by Volkswagen AG.

Downloaded from www.Manualslib.com manuals search engine

Protected by copyright. Copying for private or commercial purposes, in part or in whole, is not permitted unless authorised by Volkswagen AG. Volkswagen AG does not guarantee or accept any liability with respect to the correctness of information. Copyright by Volkswagen AG.

♦ Tensioning lever -3297-

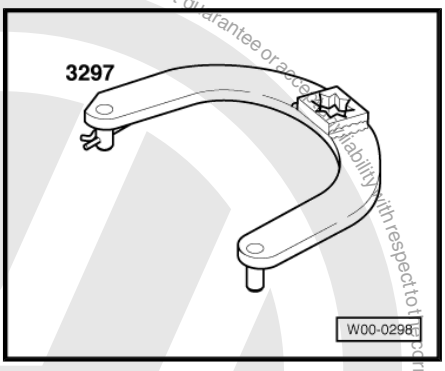

– Loosen securing bolts -1 + 2-.

3 - Tensioning arm

4 - Alternator

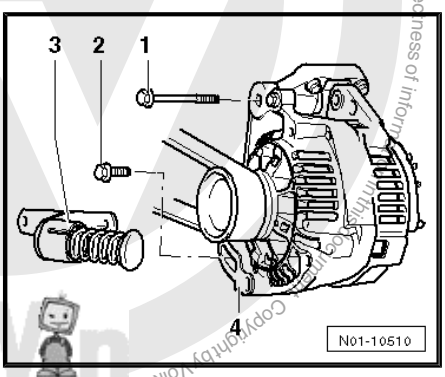

– Fit tensioning lever, secure with pin -arrow- and swing alternator downwards (use torque wrench as drive for 3297).

– Press alternator with tensioning lever to stop of tensioning arm at least three times, to ensure optimum ease of movement.

– First tighten lower and then upper alternator bolt to 25 Nm.

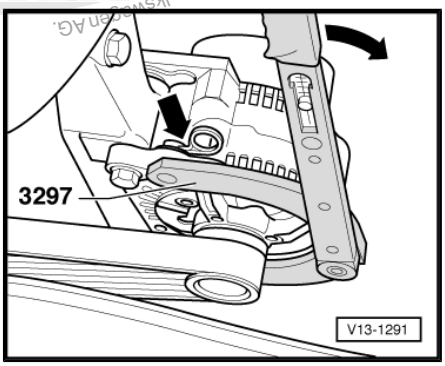

4.21 Poly V-belt: Check condition

Carry out the following procedure:

– Crank engine at vibration damper on belt pulley using a socket.

Downloaded from www.Manualslib.com manuals search engine

Check poly V-belt/s -1- for:

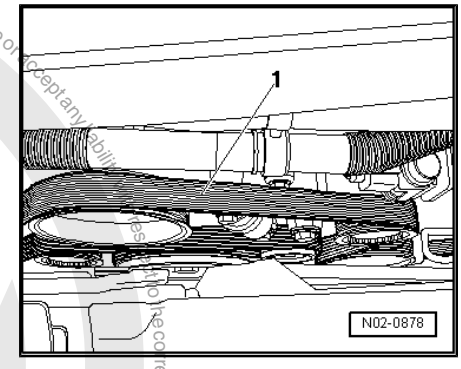

- Substructure cracks (cracks, core ruptures, cross sectional breaks)
- Layer separation (top layer, cord strands)
- Base break-up
- Fraying of cord strands
- Flank wear (material wear, frayed flanks, brittle flanks -glassy flanks-, surface cracks)
- Traces of oil and grease

Note

If faults are found it is absolutely necessary to renew the poly V-belt/s. This will avoid possible breakdowns or operating problems. Renewing the poly V-belt is a repair measure.

4.22 Calibrating compass (for North American region)

Note

- *The time needed for the calibrating process should be max. 30 seconds.*
- *The vehicle must be stationary during the calibrating process.*

– Switch on ignition.
– Wait 10 seconds.
– Switch on rear window heating.
– Wait 10 seconds.
– Switch off rear window heating.
– Switch off ignition.

Copyright by Volkswagen AG. Volkswagen AG does not guarantee or accept any liability with respect to the correctness of information in this document. Copyright by Volkswagen AG. Copying for private or commercial purposes, in part or in whole, is not permitted unless authorised by Volkswagen AG.

Downloaded from www.Manualslib.com manuals search engine

4.23 Cooling system: Check frost protection and coolant level

Note

- *From model year 2008 all engines are filled with coolant additive G12 Plus Plus (purple). Because of its positive characteristics, ensure that only G12 Plus Plus is used when replenishing. G12 Plus must not be replenished because the positive characteristics of G12 Plus Plus are then not effective.*
- *Up to model year 2007 all engines are filled with coolant additive G12 Plus according to TL VW 774 F (purple). Because of its positive characteristics, ensure that only G12 Plus or G12 Plus Plus is used when replenishing.*
- *Coolant additive G12 Plus Plus protects the complete cooling system against corrosion and reduces the formation of sludge and corrosion.*
- *G12 Plus Plus is suitable as a filled-for-life filling for cast iron and all-aluminium engines and gives optimum protection against frost, corrosion damage, scaling and overheating.*
- *G12 Plus Plus raises the boiling point to 135 °C and ensures better heat dissipation.*
- *The coolant concentration must be at least 40 % (frost protection to -25 °C) and should never exceed 60 % (frost protection to -40 °C). Otherwise both frost protection and cooling efficiency will be reduced.*
- *Frost protection must be guaranteed to approx. -25 °C.*

4.23.1 Checking frost protection, replenish coolant additive if necessary

Special tools and workshop equipment required

- Refractometer -T10007-

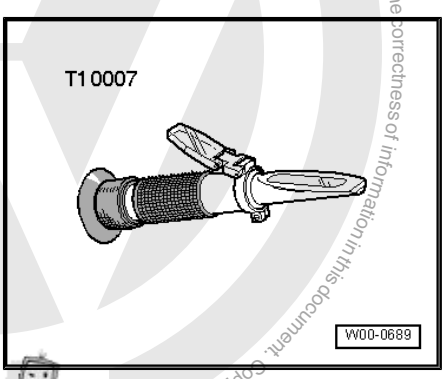

Note

Read precise value for the following tests at bright/dark boundary. Using a pipette, place a drop of water on the glass to improve the readability of the bright/dark boundary. The bright/dark boundary can be clearly recognised on the "WATERLINE".

– Check concentration of coolant additive using refractometer -T10007- (refer to operating instructions).

Protected by copyright. Copying for private or commercial purposes, in part or in whole, is not permitted unless authorised by Volkswagen AG. Volkswagen AG does not guarantee or accept any liability with respect to the correctness of information in this document. Copyright by Volkswagen AG.

Downloaded from www.Manualslib.com manuals search engine

The scale -1- of the refractometer is calibrated for coolant additives G12; G12 Plus, G12 Plus Plus and G11.

The scale -2- is only calibrated for coolant additive G13. (originally L80)

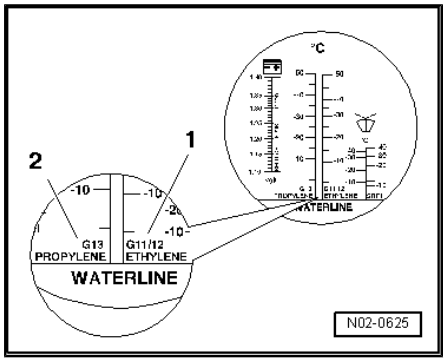

Note

- *Frost protection must be guaranteed to approx. -25 °C.*
- *If for climatic reasons a greater frost protection is required, the amount of G12 Plus Plus can be increased, but only up to 60 % (frost protection to about -40 °C), as otherwise frost protection is reduced again and cooling effectiveness is also reduced.*

– If frost protection is insufficient, drain required quantity shown in frost protection table and add coolant additive G12 Plus Plus.

Note

Observe disposal regulations!

Frost protection to °C		Quantity to drain (in litres)
Actual value	Specified value	4-cylinder engines
0	-25	3.5
	-35	4.0
-5	-25	3.0
	-35	3.5
-10	-25	2.0
	-35	3.0
-15	-25	1.5
	-35	2.0
-20	-25	1.0
	-35	1.5
-25	-35	1.0
-30	-35	0.5
-35	-40	0.5

– Check coolant additive concentration after road test again.

4.23.2 Checking coolant level, replenish coolant if necessary

– Check coolant level in expansion tank with engine cold.

Protected by copyright. Copying for private or commercial purposes, in part or in whole, is not permitted unless authorised by Volkswagen AG. Volkswagen AG does not guarantee or accept any liability with respect to the correctness of information in this document. Copyright by Volkswagen AG.

Downloaded from www.Manualslib.com manuals search engine

- Delivery inspection: Coolant level above “MIN. marking” -arrow-.
- Inspection service: Coolant level above “MIN. marking” -arrow-.

– If coolant level is too low, replenish required amount according to mixture ratio.

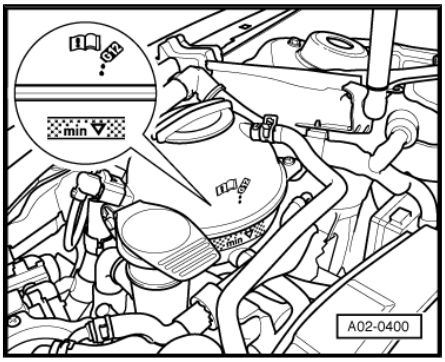

Note

If fluid loss is greater than can be expected through normal use, determine source and rectify (repair measure).

4.23.3 Mixture ratio:

Frost protection to	Coolant additive G12 Plus Plus / TL VW 774 G	Water[3)]
-25 °C	approx. 40 %	approx. 60 %
-35 °C	approx. 50 %	approx. 50 %
-40 °C	approx. 60 %	approx. 40 %

3) Use clean tap water only.

Note

- *Coolant additive G12 Plus Plus according to TL VW 774 G prevents frost and corrosion damage, scaling and also raises boiling point of coolant. For these reasons, the cooling system must be filled all-year-round with a frost and corrosion protection additive.*
- *Because of its high boiling point, the coolant improves engine reliability under heavy loads, particularly in countries with tropical climates.*
- *The coolant concentration must not be reduced by adding water even in warmer seasons and in warmer countries. The anti-freeze portion must be at least 40 %.*

4.24 Fuel filter: Renew

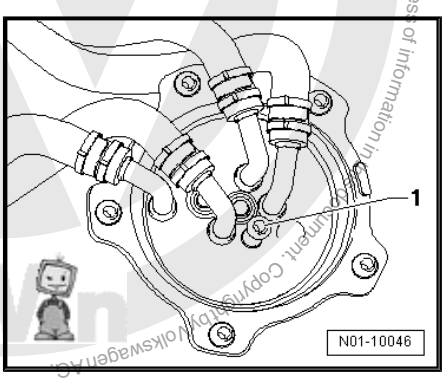

Protected by copyright. Copying for private or commercial purposes, in part or in whole, is not permitted unless authorised by Volkswagen AG. Volkswagen AG does not guarantee or accept any liability with respect to the correctness of information in this document. Copyright by Volkswagen AG.

Downloaded from www.Manualslib.com manuals search engine

Note

- *There are two different fuel filter systems.*
- *System 1 is fitted with a water extraction plug -1-, descriptions of work ⇒ page 75 .*
- *System 2 is "not" fitted with a water extraction plug, see illustration N01-10288, descriptions of work ⇒ page 77 .*

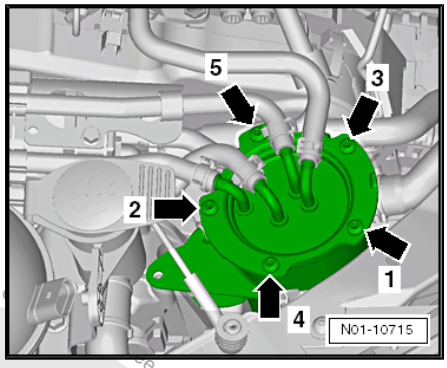

4.24.1 Renewing fuel filter: Fuel filter system with water extraction plug

Special tools and workshop equipment required

- Diesel extractor -VAS 5226-

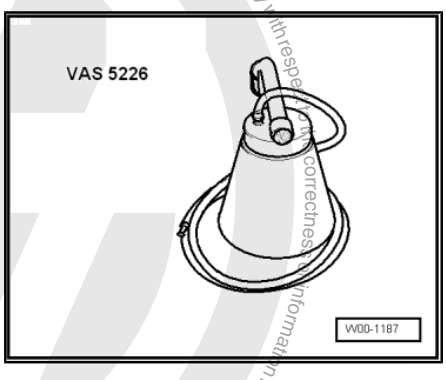

- Angled screwdriver -VAS 6543-

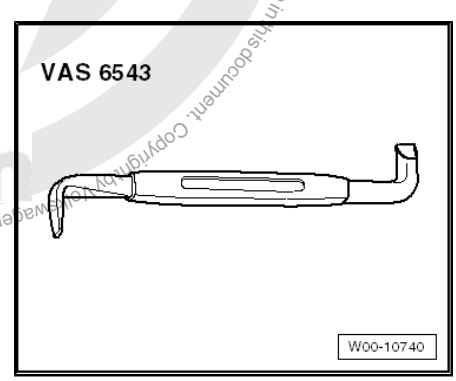

Remove engine cover ⇒ page 89 .

Removing:

Caution

Do NOT pull fuel hoses off fuel filter cover and do NOT lever at connection. Leaks could occur and the fuel filter upper part can be damaged.

Protected by copyright. Copying for private or commercial purposes, in part or in whole, is not permitted unless authorised by Volkswagen AG. Volkswagen AG does not give any warranty or accept any liability with respect to the correctness of information in this document. Copyright by Volkswagen AG.

Downloaded from www.Manualslib.com manuals search engine

Note

- *Ensure that no diesel fuel contacts other components in the engine compartment. Clean immediately, if necessary.*
- *Observe disposal regulations!*

Carry out the following procedure:

– Remove water extraction plug -1-.

– Fit hose of diesel extractor -VAS 5226- onto connector.

– Extract about 100 ml diesel fuel using diesel extractor -VAS 5226- .

– Renew seal of water extraction plug.

– Tighten water extraction plug to 3 Nm.

– Remove all securing screws of fuel filter upper part and remove fuel filter upper part.

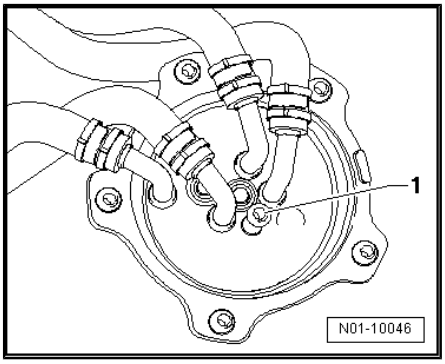

Note

If the fuel filter upper part is stuck, loosen as follows:

The fuel filter upper part can be raised at assembly groove -arrow A- using angled screwdriver -VAS 6543- .

- The assembly groove can be of different size, depending on the type of upper part.

– Insert appropriate side of angled screwdriver -VAS 6543- in assembly groove -arrow A- and turn angled screwdriver -VAS 6543- .

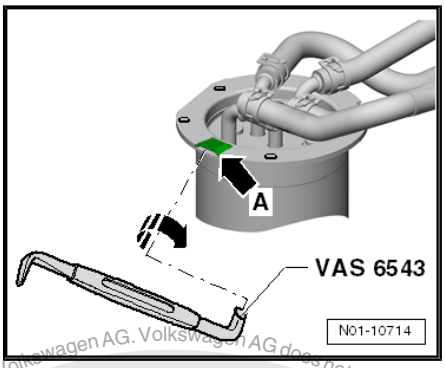

– Remove easy change filter -1- and seal -2- from fuel filter lower part -4-.

– Renew seal -3-.

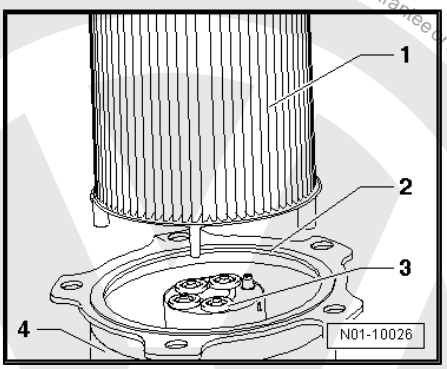

Note

Observe disposal regulations!

Protected by copyright. Copying for private or commercial purposes, in part or in whole, is not permitted unless authorised by Volkswagen AG. Volkswagen AG does not guarantee or accept any liability with respect to the correctness of information in this document. Copyright by Volkswagen AG.

Downloaded from www.Manualslib.com manuals search engine

– Insert new easy change filter into fuel filter lower part.

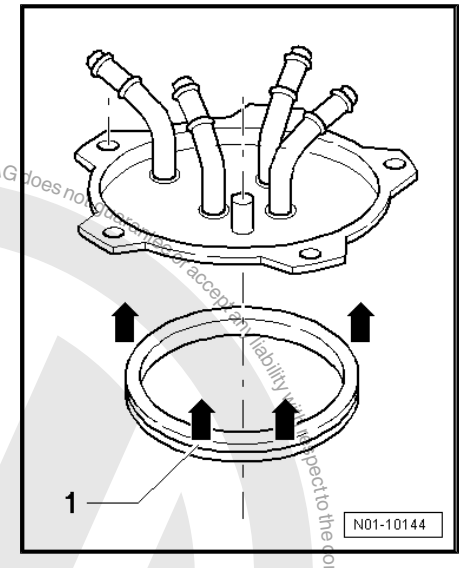

– Moisten new seal -1- lightly with diesel fuel and fit on fuel filter upper part.

– Place fuel filter upper part with seal properly onto fuel filter lower part, press on firmly and evenly until the fuel filter upper part is correctly seated.

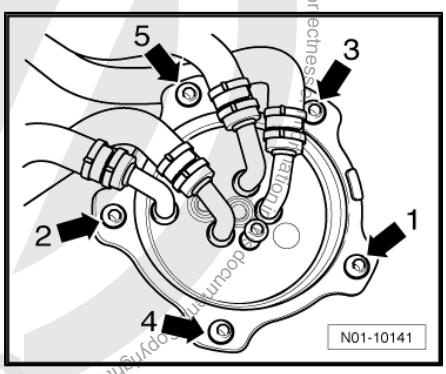

> **Caution**
>
> ***Do NOT tighten bolts for upper part, before it is correctly seated onto lower part.***

– Screw all bolts into fuel filter lower part and tighten hand-tight.

– Then tighten bolts to 5 Nm according to sequence shown in illustration.

This procedure prevents the seal from being damaged.

4.24.2 Renewing fuel filter: Fuel filter system without water extraction plug

Special tools and workshop equipment required

♦ Diesel extractor -VAS 5226-

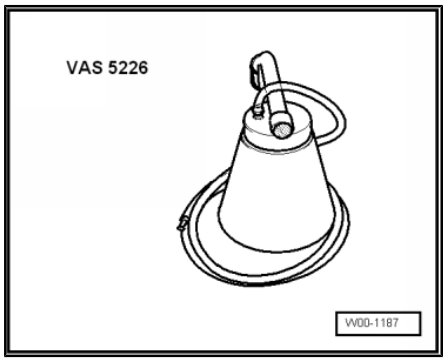

Printed by copyright. Copying for private or commercial purposes, in part or in whole, is not permitted unless authorised by Volkswagen AG. Volkswagen AG does not guarantee or accept any liability with respect to the correctness of information in this document. Copyright by Volkswagen AG.

Downloaded from www.Manualslib.com manuals search engine

♦ Angled screwdriver -VAS 6543-

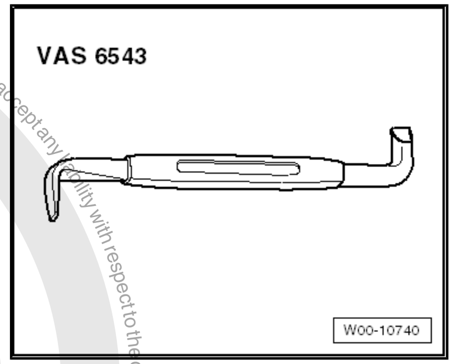

Remove engine cover ⇒ page 89 .

Removing:

> ⚠ Caution
>
> ♦ *Do NOT pull fuel hoses off fuel filter cover and do NOT lever at connection. Leaks could occur and the fuel filter upper part can be damaged.*
>
> ♦ *Ensure that no diesel fuel contacts other components in the engine compartment. Clean immediately, if necessary.*

> **Note**
>
> *Observe disposal regulations!*

Carry out the following procedure:

– Unscrew all bolts -arrows- from fuel filter upper part and remove fuel filter upper part.

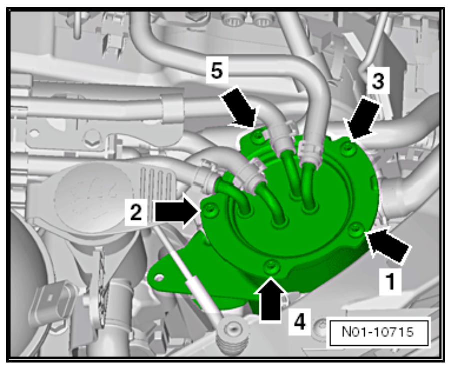

> **Note**
>
> *If the fuel filter upper part is stuck, loosen as follows:*

The fuel filter upper part can be raised at assembly groove -arrow A- using angled screwdriver -VAS 6543- .

♦ The assembly groove can be of different size, depending on the type of upper part.

– Insert appropriate side of angled screwdriver -VAS 6543- in assembly groove -arrow A- and turn angled screwdriver -VAS 6543- .

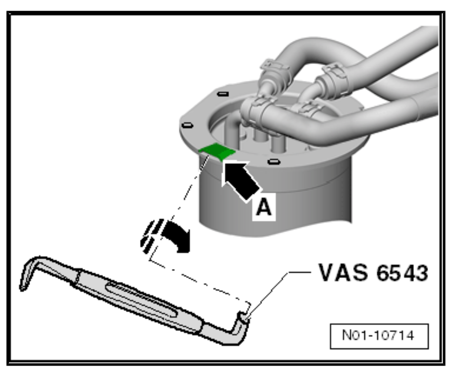

Then the fuel filter upper part is raised.

Protected by copyright. Copying for private or commercial purposes, in part or in whole, is not permitted unless authorised by Volkswagen AG. Volkswagen AG does not guarantee or accept any liability with respect to the correctness of information in this document. Copyright by Volkswagen AG.

Downloaded from www.Manualslib.com manuals search engine

– Take filter -3- out of fuel filter lower part.

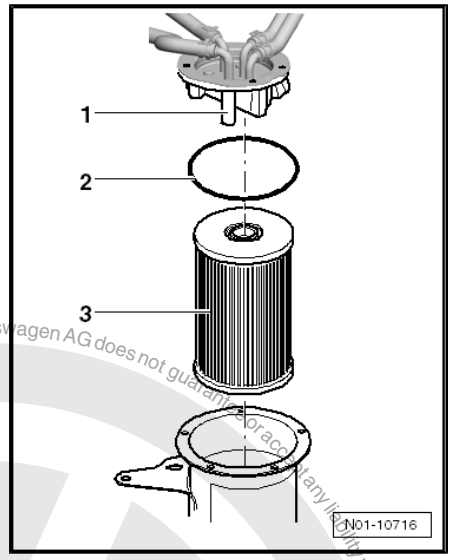

– Remove old seal -2- from fuel filter upper part -1- by levering seal out of respective groove -arrow-.

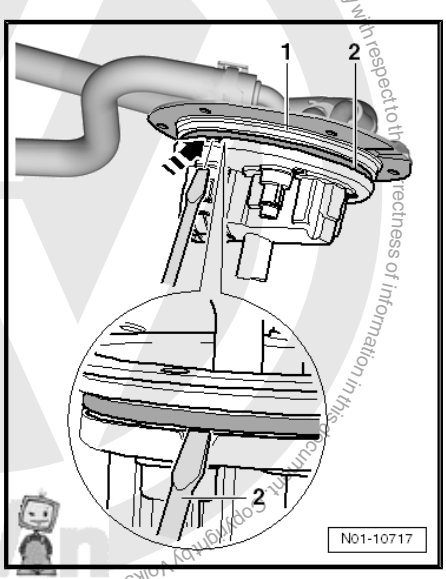

Caution

Remove all diesel, dirt and water residues from fuel filter lower part using diesel extractor -VAS 5226- .

Note

Observe disposal regulations!

Installing:

– Insert new filter into fuel filter lower part.

– Moisten new seal -1- lightly with diesel fuel and insert fuel filter upper part -arrows-.

– Place fuel filter upper part with seal properly onto fuel filter lower part, press on firmly and evenly until the fuel filter upper part is correctly seated.

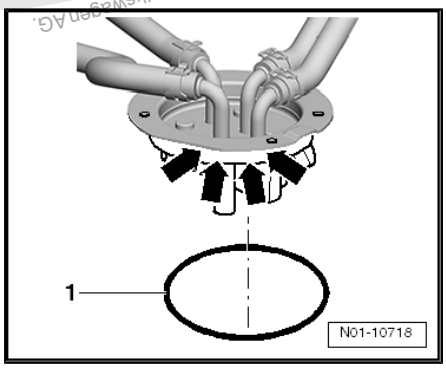

Caution

Do NOT tighten bolts for upper part, before it is correctly seated onto lower part.

Protected by copyright. Copying for private or commercial purposes, in part or in whole, is not permitted unless authorised by Volkswagen AG. Volkswagen AG does not guarantee or accept any liability with respect to the correctness of information in this document. Copyright by Volkswagen AG.

Downloaded from www.Manualslib.com manuals search engine

– Screw all bolts into fuel filter lower part and tighten hand-tight.
– Then tighten bolts to 5 Nm according to sequence shown in illustration -arrows-.

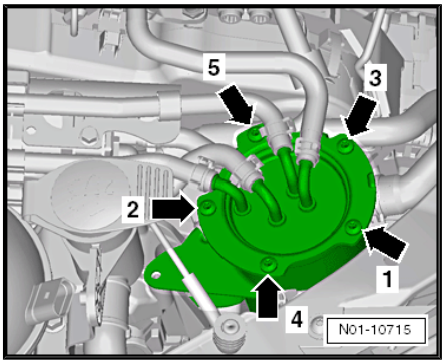

Caution

This procedure prevents the seal from being damaged.

4.25 Air filter: Clean housing and renew filter element

Removing and installing air filter element: 1.4 l engine ⇒ page 80 .

Removing and installing air filter element: 1.6 l engine ⇒ page 82 .

Removing and installing air filter element: 2.0 l FSI, 1.4 l TFSI engine and Flex Fuel engine ⇒ page 83 .

Removing and installing air filter element: 2.0 l TFSI engine ⇒ page 83 .

Removing and installing air filter element: 2.5 l petrol injection engines ⇒ page 85 .

Removing and installing air filter element: 3.2 l engine ⇒ page 87 .

Removing and installing air filter element for vehicles with diesel engine and 1.4 l TSI engine ⇒ page 88 .

4.25.1 Removing and installing air filter element: 1.4 l engine

- There are two different air filter versions:

♦ Air filter version 1: air filter housing integrated in engine cover ⇒ page 80

♦ Air filter version 2: Separate air filter housing on engine ⇒ page 81

Air filter version 1

– Remove engine cover ⇒ page 89 .
– Remove bolts -arrows-.

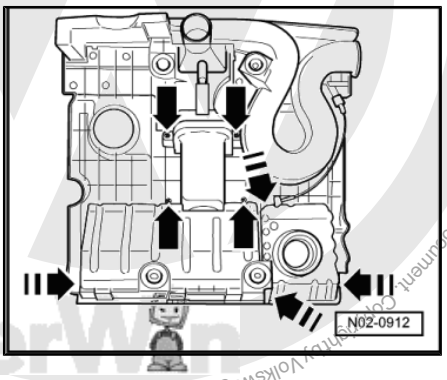

Protected by copyright. Copying for private or commercial purposes, in part or in whole, is not permitted unless authorised by Volkswagen AG. Volkswagen AG does not guarantee or accept any liability with respect to the correctness of information in this document. Copyright by Volkswagen AG.

Downloaded from www.Manualslib.com manuals search engine

– Remove air filter housing lower part -1- and air filter element -2-.

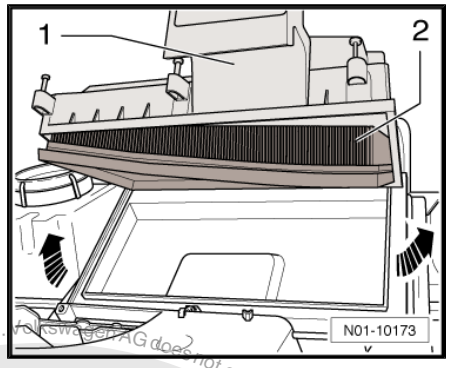

Note

Observe disposal regulations!

– Clean air filter housing lower part.

– Insert new filter element -1- into air filter housing lower part -2-.

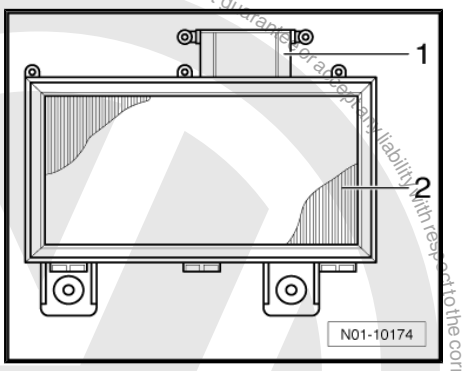

Note

- *To secure the air filter housing upper part to air filter housing lower part and intake connection, self-tapping bolts are used as standard. If these bolts are loosened and tightened using a cordless screwdriver, the thread in the air filter housing upper part can be damaged.*
- *For this reason it is only permitted to use a cordless screwdriver, if the following prerequisites are fulfilled:*
- The speed of cordless screwdriver may be max. 200 rpm.
- A specified torque of max. 3 Nm must be adjustable.

– Tighten bolts -arrows- to max. 3 Nm.

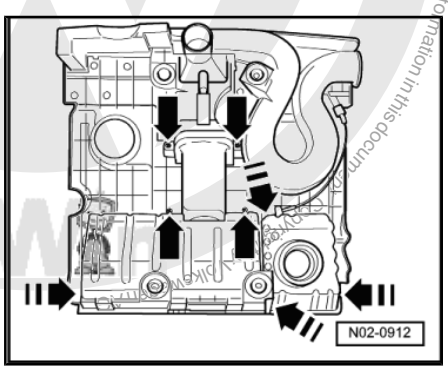

Air filter version 2

Carry out the following procedure:

– Carefully pull off hose -1-.

– Loosen bolts of air filter housing upper part -2- and fold upwards to remove the air filter -3-.

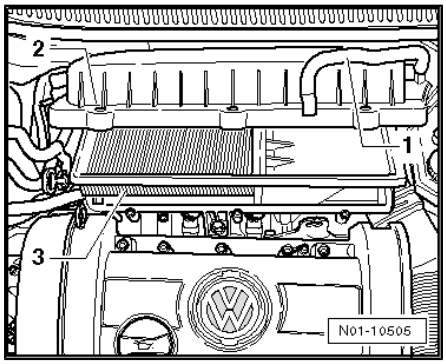

Note

Observe disposal regulations!

– Clean air filter housing.

– Install air filter and air filter housing in reverse order.

Protected by copyright. Copying for private or commercial purposes, in part or in whole, is not permitted unless authorised by Volkswagen AG. Volkswagen AG does not guarantee or accept any liability with respect to the correctness of information in this document. Copyright by Volkswagen AG.

Downloaded from www.Manualslib.com manuals search engine

4.25.2 Removing and installing air filter element: 1.6 l engine

Removing

– Remove engine cover ⇒ page 89 .

– Remove bolts -arrows-.

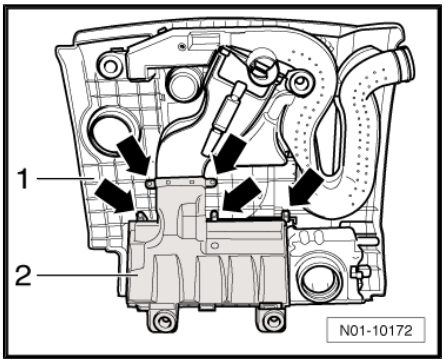

– Remove air filter housing lower part -1- and air filter element -2-.

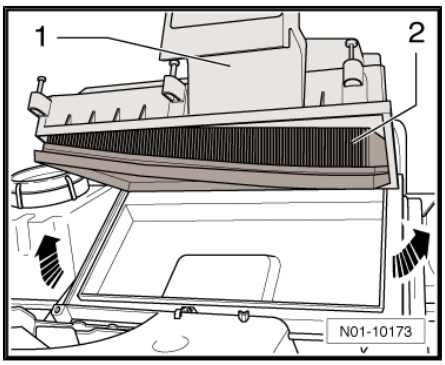

Note

Observe disposal regulations!

– Clean air filter housing lower part.

Installing

– Insert new filter element -3- into air filter housing lower part -2-.

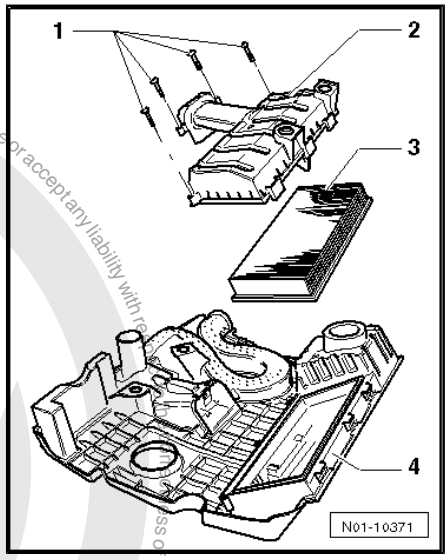

Note

- *To secure the air filter housing upper part to air filter housing lower part and intake connection, self-tapping bolts are used as standard. If these bolts are loosened and tightened using a cordless screwdriver, the thread in the air filter housing upper part can be damaged.*
- *For this reason it is only permitted to use a cordless screwdriver, if the following prerequisites are fulfilled:*
- *The speed of cordless screwdriver may be max. 200 rpm.*
- *A specified torque of max. 3 Nm must be adjustable.*

– Fit air filter housing lower part to filter housing upper part.

Protected by copyright. Copying for private or commercial purposes, in part or in whole, is not permitted unless authorised by Volkswagen AG. Volkswagen AG does not guarantee or accept any liability with respect to the correctness of information in this document. Copyright by Volkswagen AG.

Downloaded from www.Manualslib.com manuals search engine

– Tighten bolts -arrows- to max. 3 Nm.

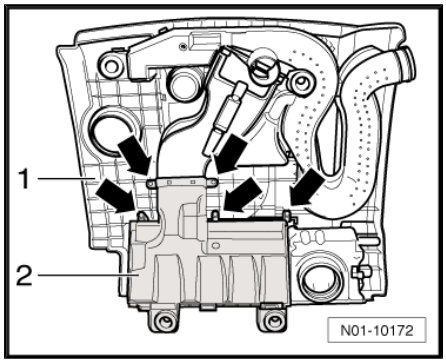

4.25.3 Removing and installing air filter element: 2.0 l FSI, 1.4 l TFSI engine and Flex Fuel engine

– Remove the 4 screws -arrows- and remove cover.

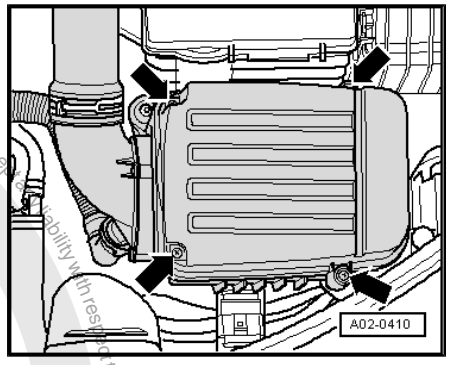

– Pull off retainer -2-.
– Take out used filter element -3-.

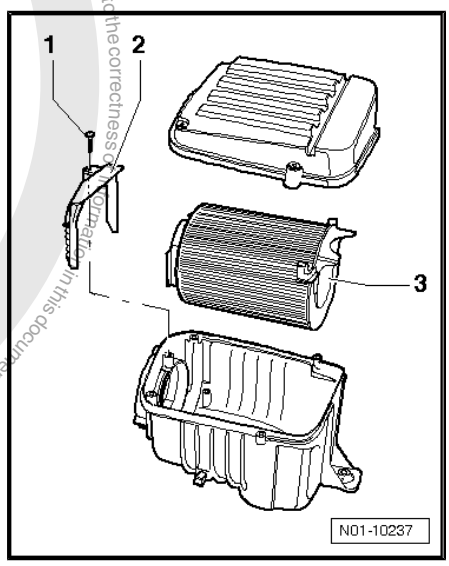

Note

Observe disposal regulations!

– Clean filter housing and install new filter element.

Specified torques:

- 2.0 l FSI: Tighten bolt -1- for retainer to 2 Nm and bolts for cover to 3 Nm.
- 1.4 l TFSI: Tighten bolt -1- for retainer and bolts for cover to 8 Nm.

Protected by copyright. Copyright by Volkswagen AG. Volkswagen AG does not guarantee or accept any liability with respect to the correctness of information in this document. Copyright by Volkswagen AG. Protected by copyright. Copying for private or commercial purposes, in part or in whole, is not permitted unless authorised by Volkswagen AG.

4.25.4 Removing and installing air filter element: 2.0 l TFSI engine

Removing

– Remove engine cover ⇒ page 89 .

Downloaded from www.Manualslib.com manuals search engine

– Place engine cover with upper side on a soft surface to prevent damage to chrome applications.

– Unscrew bolts -arrows- from engine cover lower side.

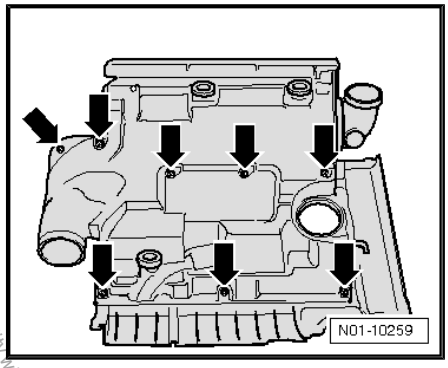

– Separate air filter housing lower part -1- from air filter housing upper part -3-.

– Remove air filter element -2- from air filter housing lower part -1-.

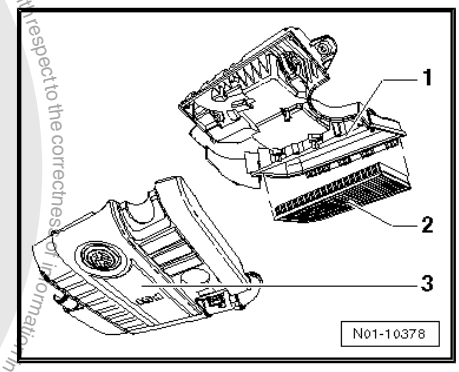

Installing

Note

- *To secure the air filter housing upper part to air filter housing lower part and intake connection, self-tapping bolts are used as standard. If these bolts are loosened and tightened using a cordless screwdriver, the thread in the air filter housing upper part can be damaged.*
- *For this reason it is only permitted to use a cordless screwdriver, if the following prerequisites are fulfilled:*
- *The speed of cordless screwdriver may be max. 200 rpm.*
- *A specified torque of max. 3 Nm must be adjustable.*
- *On the Golf GTI "Edition 30" and Golf GTI "Pirelli" the rubber buffers for engine cover must be renewed* *⇒ page 95* *.*

– Hook air filter housing lower part -1- on retaining lugs -arrows- of air filter housing upper part -2-, swing in direction of arrow and press on lightly.

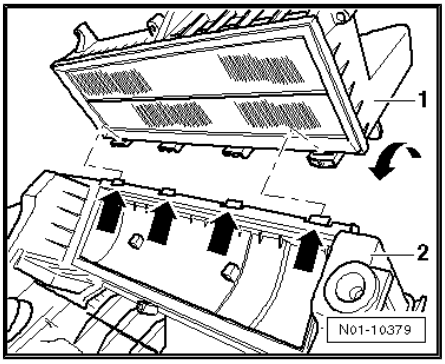

Copyright by Volkswagen AG. Volkswagen AG does not guarantee or accept any liability with respect to the correctness of information in this document. Copyright by Volkswagen AG. Protected by copyright. Copying for private or commercial purposes, in part or in whole, is not permitted unless authorised by Volkswagen AG.

Downloaded from www.Manualslib.com manuals search engine

– Both parts of housing must be flush -arrows-.

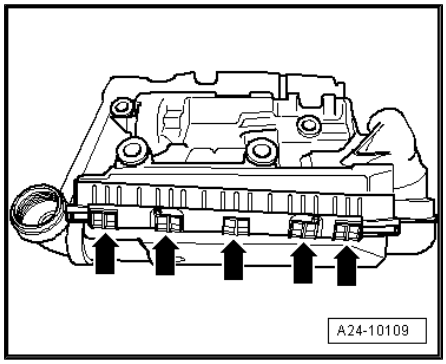

– Tighten bolts -arrows- to max. 3 Nm.

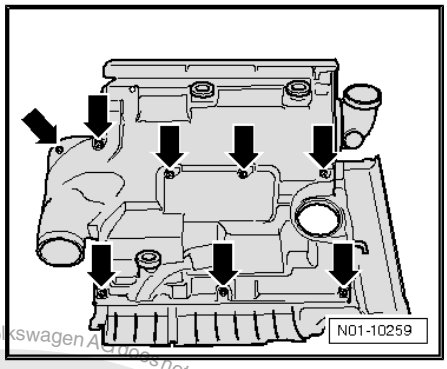

4.25.5 Removing and installing air filter element: 2.5 l petrol injection engine

Removing

– Remove engine cover ⇒ page 89

– Place engine cover with upper side on a soft surface and prevent damage to the housing.

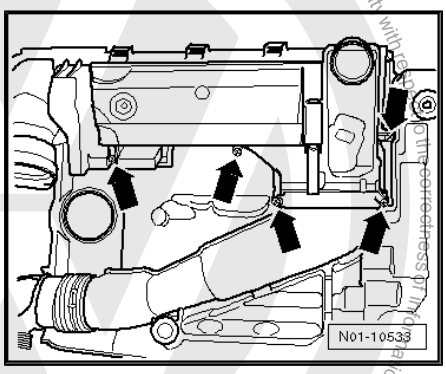

– Unscrew bolts -arrows- from engine cover lower side.

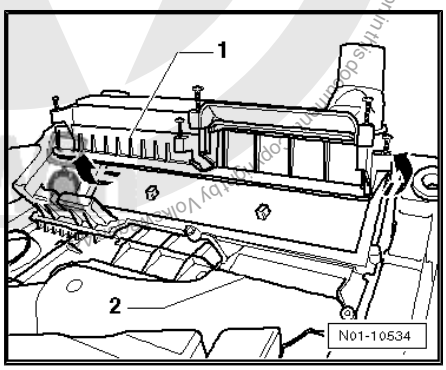

Protected by copyright. Copying for private or commercial purposes, in part or in whole, is not permitted unless authorised by Volkswagen AG. Volkswagen AG does not guarantee or accept any liability with respect to the correctness of information in this document. Copyright by Volkswagen AG.

Downloaded from www.Manualslib.com manuals search engine

– Lift air filter housing lower part -1- upwards in direction of arrow and remove.

– Remove air filter element -1- from air filter housing lower part -2-.

– Blow out air filter housing with compressed air if necessary.

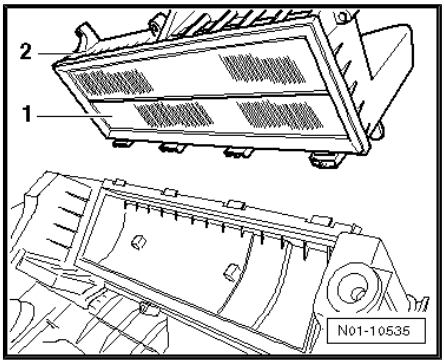

Installing

– Insert air filter element -1- into air filter housing lower part -2-.

Note

Ensure that sealing surfaces of air filter housing are properly seated.

Note

- *For attaching the air filter housing upper part onto air filter housing lower part and intake connection, self-tapping bolts must be used as standard. When loosening or tightening these bolts using a power screwdriver, the thread in air filter housing upper part could be damaged.*
- *For this reason it is only permitted to use a power screwdriver, if the following prerequisites are fulfilled:*
- *The speed of power screwdriver must be max. 200 rpm.*
- *Setting torque of max. 2 Nm must be adjustable.*

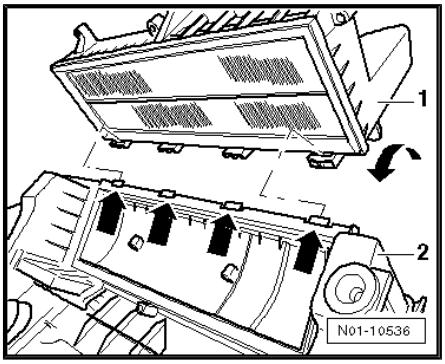

– Hook air filter lower part -1- on retaining lugs -arrows- of air filter upper part -2- and swing in direction of arrow, then press on lightly.

Check if parts of housing -1- and -2- are flush (rear part)

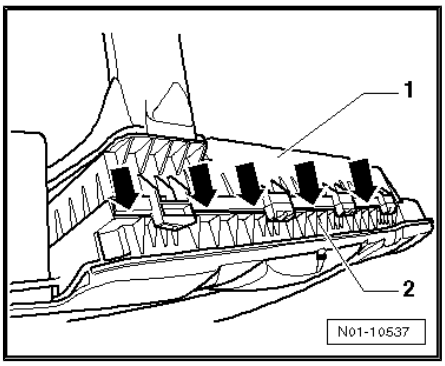

Protected by copyright. Copying for private or commercial purposes, in part or in whole, is not permitted unless authorised by Volkswagen AG. Volkswagen AG does not guarantee or accept any liability with respect to the correctness of information in this document. Copyright by Volkswagen AG.

Downloaded from www.Manualslib.com manuals search engine

– Both parts of housing must be flush -arrows-.

Check if parts of housing -1- and -2- are flush (front part)

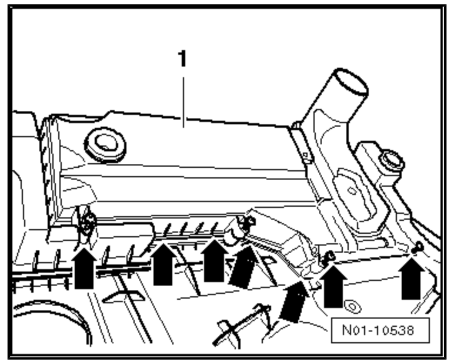

– Both parts of housing must be flush -arrows-.

– Tighten bolts -arrows- to max. 2 Nm.

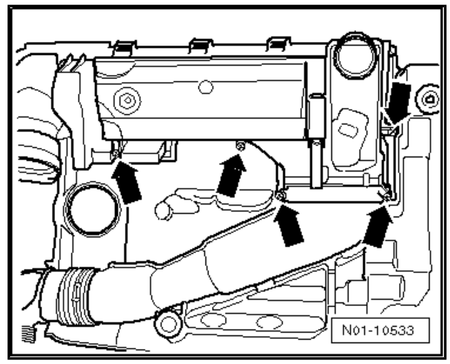

Note

Tighten bolts evenly and alternately so that both parts of housing do not cant.

– Install engine cover ⇒ page 89 .

4.25.6 Removing and installing air filter element: 3.2 l engines

Special tools and workshop equipment required

♦ Spring-type clip pliers -VAS 6499-

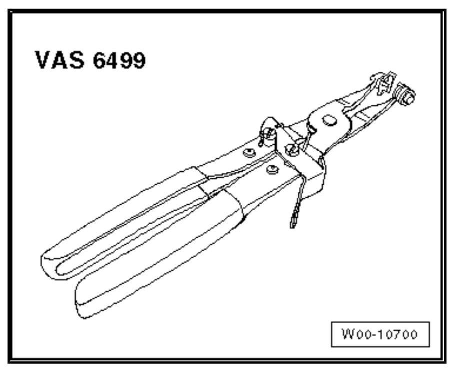

Removing:

– Open hose clip -B- using spring-type clip pliers -VAS 6499- and pull air intake hose off.

– Release air mass meter connector -A- and pull off.

– Remove securing bolts -arrows-.

– Lift filter housing upper part and remove upwards.

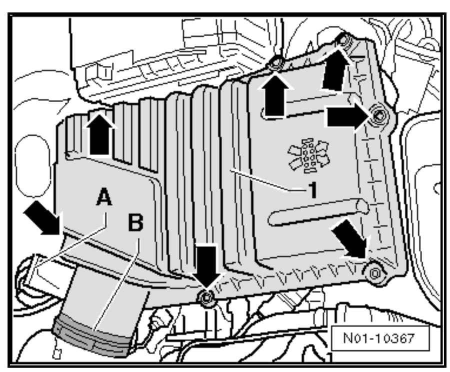

Protected by copyright. Copying for private or commercial purposes, in part or in whole, is not permitted unless authorised by Volkswagen AG. Volkswagen AG does not guarantee or accept any liability with respect to the correctness of information in this document. Copyright by Volkswagen AG.

Downloaded from www.Manualslib.com manuals search engine

– Take out used filter element -3-.

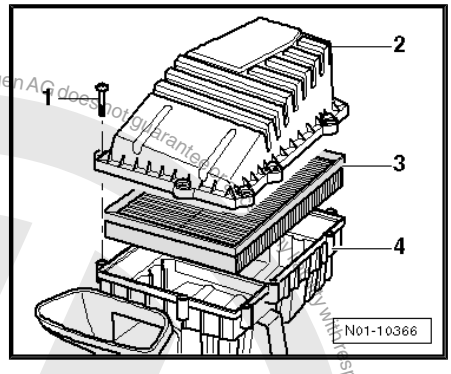

Note

Observe disposal regulations!

Installing:

– Clean filter housing -4- and install new filter element -3-.

– Insert filter housing upper part -2- and tighten bolts -1- to 5 Nm.

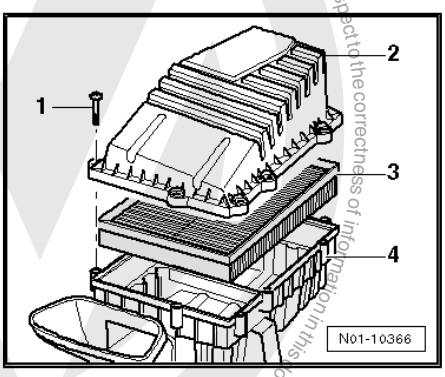

– Push on air mass meter connector -A- and engage.

– Connect air intake hose on air mass meter and secure with hose clip -B-.

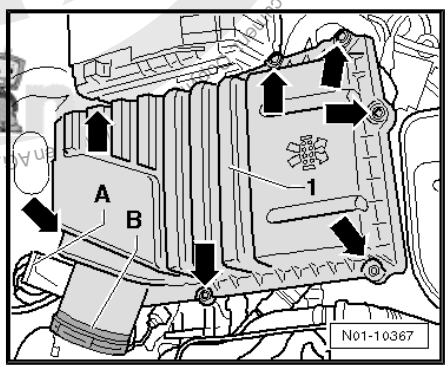

4.25.7 Removing and installing air filter element on vehicles with diesel engine and 1.4 l TSI engine

– Remove bolts -arrows-.

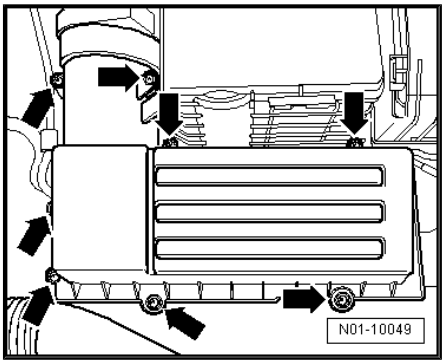

Protected by copyright. Copying for private or commercial purposes, in part or in whole, is not permitted unless authorised by Volkswagen AG. Volkswagen AG does not give any guarantee or warranty with respect to the correctness of information in this document.

Downloaded from www.Manualslib.com manuals search engine

– Remove air filter housing upper part and air filter element -1-.

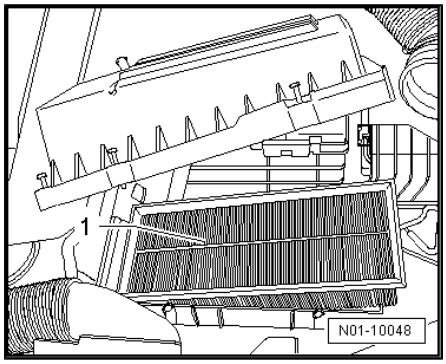

Note

Observe disposal regulations!

– Clean air filter housing lower part.
– Insert new air filter element and fit air filter housing upper part.

– Tighten air filter housing upper part with bolts -arrows- to 1.6 Nm ±0.2.

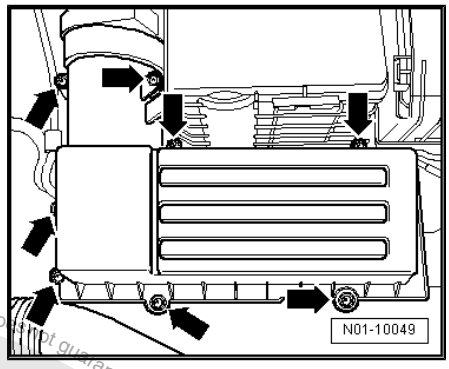

4.26 Engine cover -top-: Removing and installing

Caution

- *Do not push with the fist or a tool on the engine cover when it is installed or engaged at securing points. It could be damaged.*

Removing and installing engine cover: 1.4 l and 1.6 l FSI petrol direct injection engines ⇒ page 90 .

Removing and installing engine cover: 1.4 l injection engines ⇒ page 91 .

Removing and installing engine cover: 1.4 l TSI engines ⇒ page 92 .

Removing and installing engine cover: 1.6 l injection engines ⇒ page 93 .

Removing and installing engine cover: 2.0 l TFSI petrol direct injection engines ⇒ page 93

Removing and installing engine cover: 2.0 l FSI petrol direct injection engines ⇒ page 95 .

Removing and installing engine cover: 2.0 l TSI engine ⇒ page 96

Removing and installing engine cover: 2.5 l petrol injection engines ⇒ page 96 .

Removing and installing engine cover: 1.9 l PD diesel engines ⇒ page 97 .

Removing and installing engine cover: 2.0 l PD diesel engines ⇒ page 99 .

Protected by copyright. Copying for private or commercial purposes, in part or in whole, is not permitted unless authorised by Volkswagen AG. Volkswagen AG does not guarantee or accept any liability with respect to the correctness of information in this document. Copyright by Volkswagen AG.

Downloaded from www.Manualslib.com manuals search engine

Removing and installing engine cover: 2.0 l PD diesel engines (Golf GT) ⇒ page 99 .

Renewing rubber buffers for engine cover ⇒ page 95

4.26.1 Removing and installing engine cover: 1.4 l and 1.6 l FSI petrol direct injection engines

Removing:

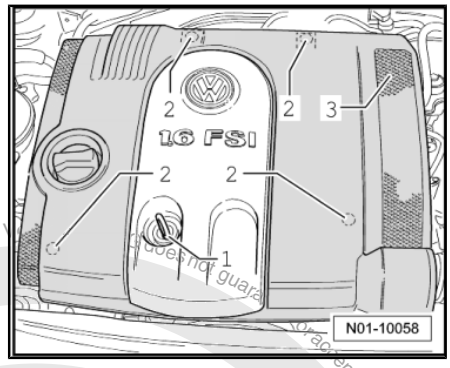

– Pull out dipstick -1-.
– Pull off connector -C- and hose connection -B-.
– Loosen clip -A- and pull off hose.

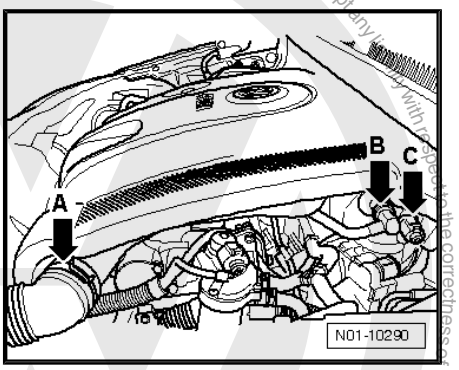

– Disengage engine cover at the securing points -2- and remove upwards.

Installing:

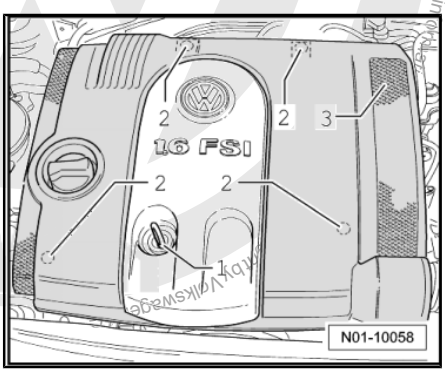

– Fit engine cover at securing points -2- and press on, so that it engages.
– Fit connector -C- and hose connection -B-.

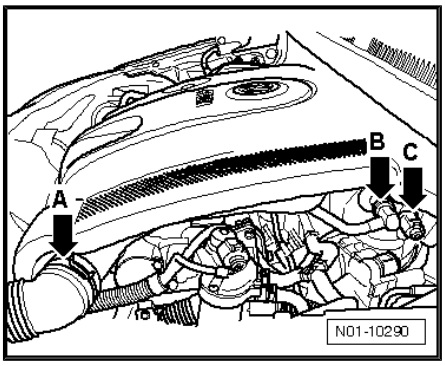

Protected by copyright. Copying for private or commercial purposes, in part or in whole, is not permitted unless authorised by Volkswagen AG. Volkswagen AG does not guarantee or accept any liability with respect to the correctness of information in this repair manual.

Downloaded from www.Manualslib.com manuals search engine

– Fit hose and tighten clip -A-.
– Slide oil dipstick -1- into guide tube.

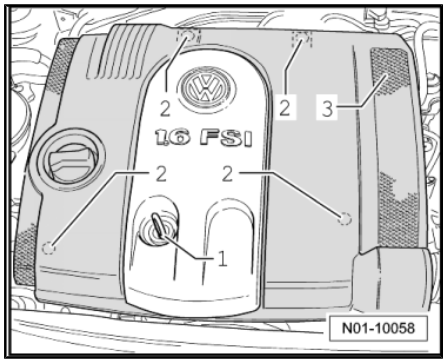

4.26.2 Removing and installing engine cover: 1.4 l injection engines

- There are two different versions of engine covers:

♦ Engine cover version 1: air filter housing integrated in engine cover ⇒ page 91

♦ Engine cover version 2: engine cover on engine ⇒ page 91

Engine cover version 1

Removing:

– Pull hose off oil separator or non-return valve off air filter housing upper part.
– Disengage engine cover -arrows-, pull cover off throttle valve control part and take out upwards.

Installing:

– Fit engine cover on throttle valve control part at securing points and press on, so that it engages.
– Connect hose of oil separator or non return valve of air filter housing upper part.

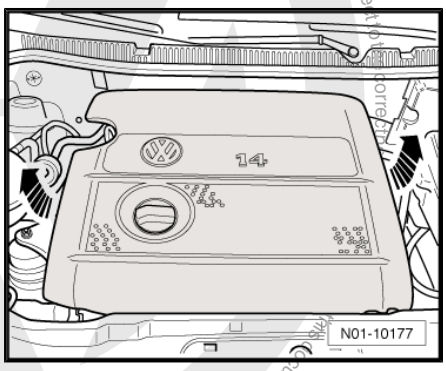

Engine cover version 2

– Carefully pull off hose -2-.
– Unscrew the four bolts -1- and remove cover.
– Install in reverse order.

Bolt torque setting 10 Nm

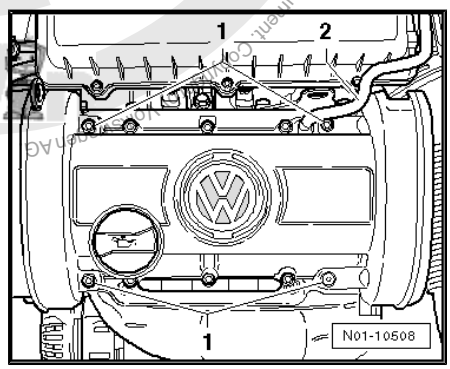

Protected by copyright. Copying for private or commercial purposes, in part or whole, is not permitted unless authorised by Volkswagen AG. Volkswagen AG does not guarantee or accept any liability with respect to the correctness of this document.

Downloaded from www.Manualslib.com manuals search engine

4.26.3 Removing and installing engine cover: 1.4 l TSI engines

Engine cover version 1

Removing:

– If fitted, pull hose off connection -arrow A -.

– Disengage engine cover at securing points -arrows B- and raise.

– Then pull out of bracket -arrow C-,

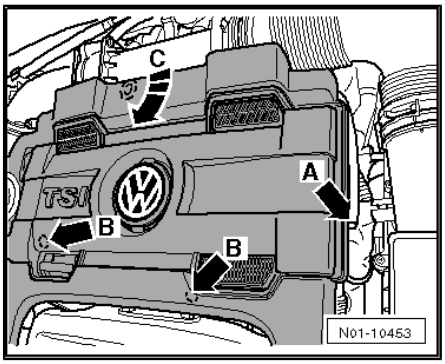

Installing:

– Push engine cover -1- with lug -arrow A- at securing point -2- into bracket -arrow B-.

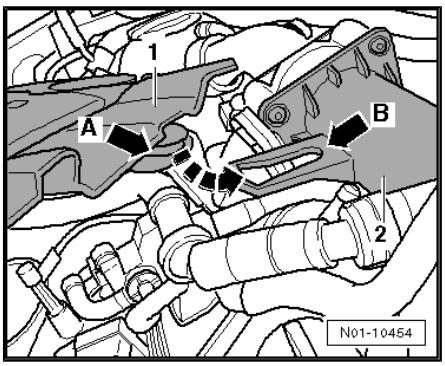

– Then fit engine cover at the other securing points -arrows B- and press on, until they noticeably engage.

– If fitted, connect hose at connection -arrow A-.

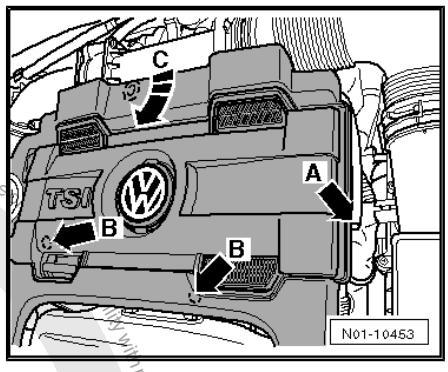

Engine cover version 2

Removing:

– Remove securing bolts -1- of engine cover -2-.

– Detach coolant hoses -2- on engine cover and pull engine cover upwards.

Installing:

– Attach coolant hoses -2- on engine cover and fit engine cover onto camshaft housing.

– Tighten securing bolts -1- to 8 Nm.

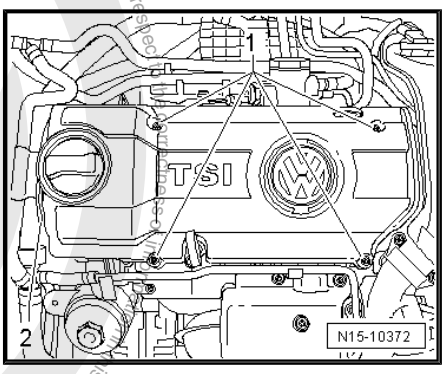

Protected by copyright. Copying for private or commercial purposes, in part or in whole, is not permitted unless authorised by Volkswagen AG. Volkswagen AG does not guarantee
This document. Copyright by Volkswagen AG.

Downloaded from www.Manualslib.com manuals search engine

4.26.4 Removing and installing engine cover: 1.6 l injection engines

The Flex Fuel engine has no engine cover.

Removing:

– Pull out dipstick -1-.

– Unclip engine cover at the securing points -2- and remove upwards.

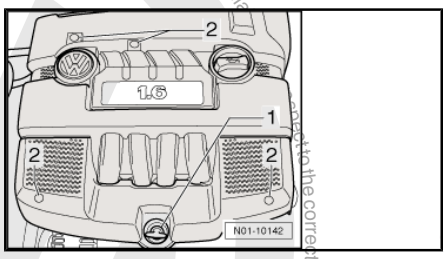

Installing:

– Fit engine cover -arrows A- to securing pins -arrows B- first.

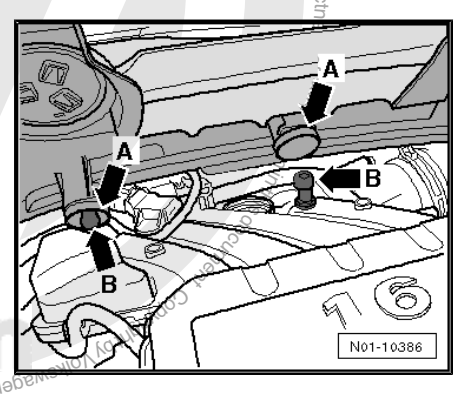

– Then fit at the other securing points -2- and press on, so that it noticeably engages.

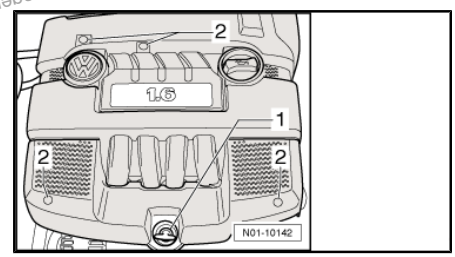

4.26.5 Removing and installing engine cover: 2.0 l TFSI petrol direct injection engines

Vehicles up to model year 2005 ⇒ page 94 .

Vehicles from model year 2006 ⇒ page 94

Special tools and workshop equipment required

♦ Spring-type clip pliers -VAS 6499-

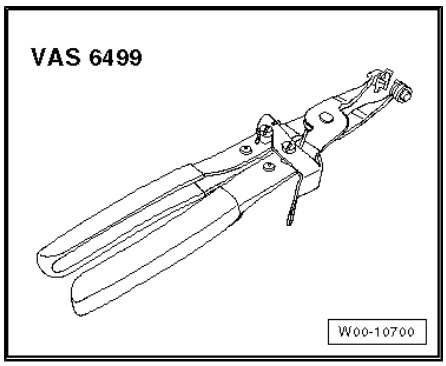

Protected by copyright. Copying for private or commercial purposes, in part or in whole, is not permitted unless authorised by Volkswagen AG. Volkswagen AG does not guarantee or accept any liability with respect to the correctness of information in this copy.

Downloaded from www.Manualslib.com manuals search engine

Vehicles up to model year 2005

Removing

– Relieve clips on air mass meter -A- and on air intake nozzle -B- using spring-type clip pliers -VAS 6499- and push back.

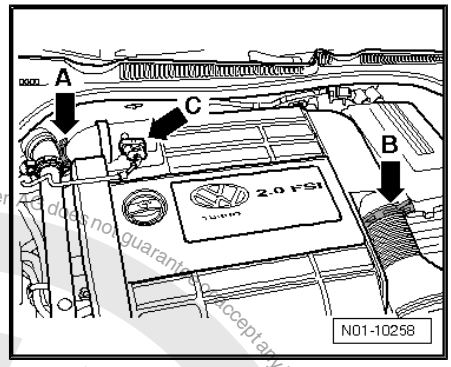

– Pull connector -C- off air mass meter, and place connector to side.

– Push rubber boot -1- back in direction of turbocharger.

– First pull engine cover off at front -arrow 3- and then at rear -arrow 4-. To do this, reach the cover below from side.

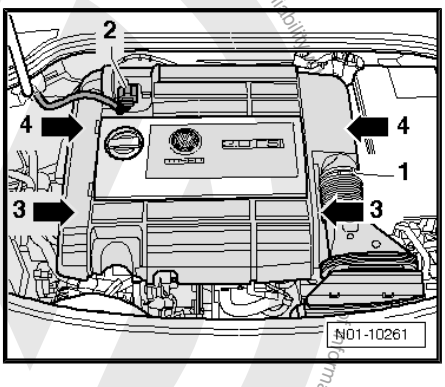

Installing

Note

Dot not grease or lubricate rubber buffers of engine cover panel before installation.

Install in reverse order.

Vehicles from model year 2006

Removing

– Relieve spring-type clip -A- using spring-type clip pliers -VAS 6499- and slide air intake duct -B- from engine compartment cover -C-.

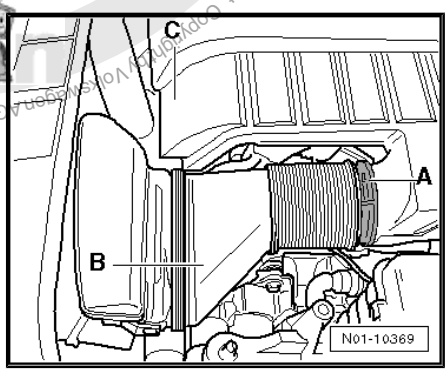

– Pull connector -1- off air mass meter, and place connector to side.

– Disengage the two securing clips -arrows A-.

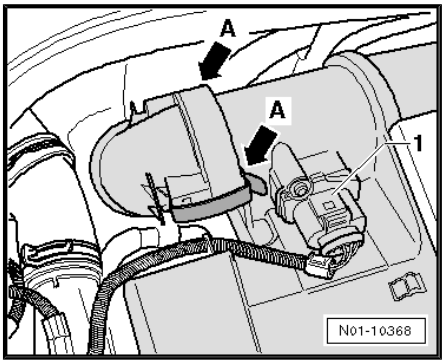

Protected by copyright. Copying for private or commercial purposes, in part or in whole is not permitted unless authorised by Volkswagen AG. Volkswagen AG does not guarantee or accept any liability with respect to the correctness and completeness of information in this document. Copyright by Volkswagen AG.

Downloaded from www.Manualslib.com manuals search engine

– First disengage engine cover at securing points -arrows 3- and then at securing points -arrows 4- and raise.

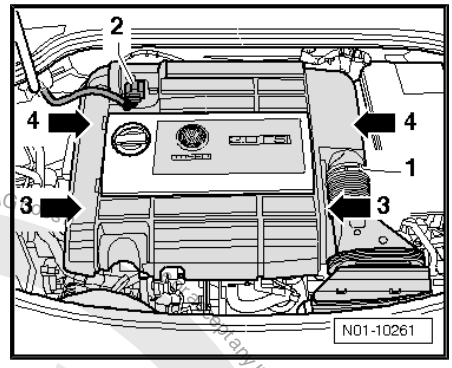

Installing

Note

Dot not grease or lubricate rubber buffers of engine cover panel before installation.

Install in reverse order.

4.26.6 Renewing rubber buffers for engine cover panel

Only Golf GTI "Edition 30" and Golf GTI "Pirelli"

Note

The rubber buffers for engine cover panel are renewed every 60,000 km in conjunction with air filter change for the Golf GTI "Edition 30" and Golf GTI "Pirelli".

– Remove engine cover as described ⇒ page 93

– Place engine cover with upper side on a soft surface to prevent damage to chrome applications.

– Pull rubber buffers -arrows- for engine cover panel out upwards.

– Push new rubber buffers into guides.

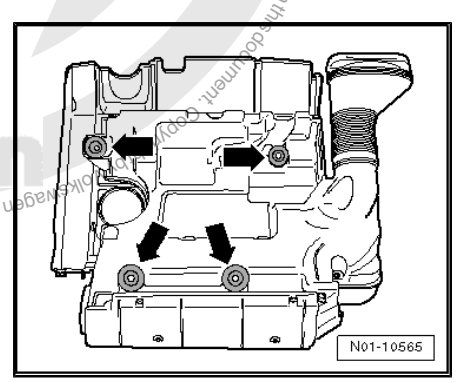

Note

Dot not grease or lubricate rubber buffers of engine cover panel -arrows- before installation.

Install engine cover in reverse order.

4.26.7 Removing and installing engine cover: 2.0 l FSI petrol direct injection engines

Removing:

– Unclip engine cover at securing points -arrows- and remove upwards.

Installing:

Install in reverse order.

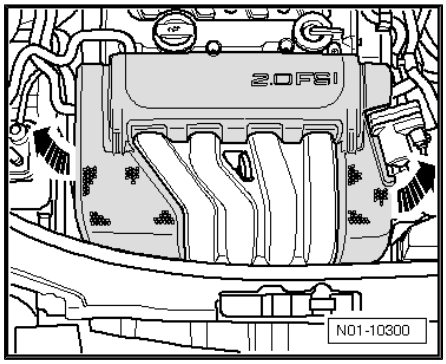

Protected by copyright. Copying for private or commercial purposes, in part or in whole, is not permitted unless authorised by Volkswagen AG. Volkswagen AG does not guarantee or assume any liability with respect to the correctness of information in this document. Copyright by Volkswagen AG.

Downloaded from www.Manualslib.com manuals search engine

4.26.8 Removing and installing engine cover: 2.0 l TSI engine

Removing:

– Unclip engine cover at securing points -arrows- and remove upwards.

Installing:

Install in reverse order.

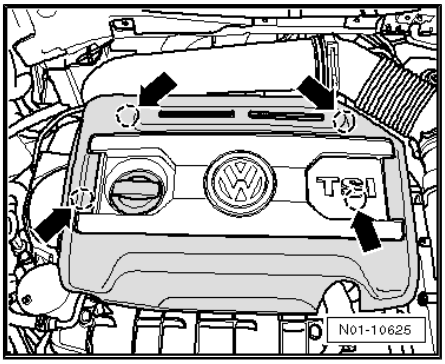

4.26.9 Removing and installing engine cover: 2.5 l petrol injection engines

Special tools and workshop equipment required

♦ Spring-type clip pliers -VAS 6499-

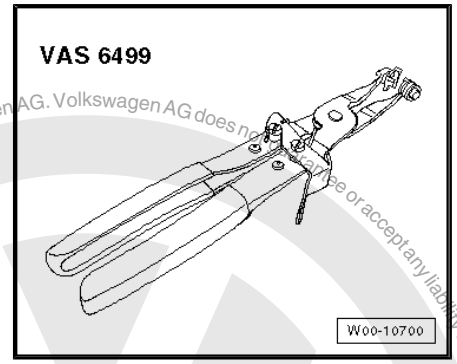

Removing

– Remove bolts of air intake system -arrows A-.

– Relieve clips on air mass meter -arrow B- using spring-type clip pliers -VAS 6499- and push them back.

– Separate air intake hose -1- on air mass meter -2-.

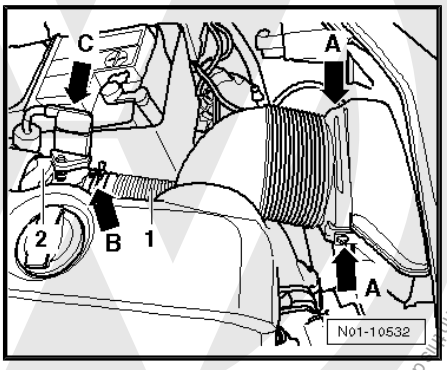

Protected by copyright. Copying for private or commercial purposes, part or in whole, is not permitted unless authorised by Volkswagen AG. Volkswagen AG does not guarantee or accept any liability with respect to the correctness of information in this document. Copyright by Volkswagen AG.

Downloaded from www.Manualslib.com manuals search engine

– Pull connector -C- off air mass meter, and place connector to side.
– First disengage engine cover at securing points -arrows A- and carefully remove from fastenings.
– Slightly raise engine cover at front.
– Then disengage engine cover at securing points -arrows B- and carefully remove from fastenings.
– Carefully remove engine cover upwards -movement arrows-.

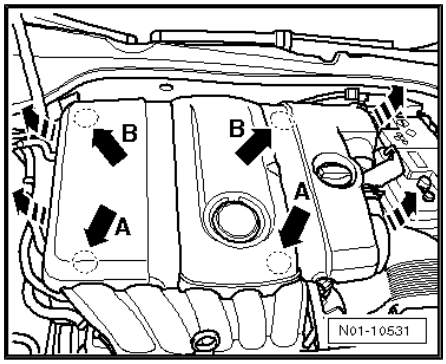

Note

Ensure that the air mass meter is not damaged when removing the engine cover.

Installing

– First fit engine cover onto rear securing points -arrows B-, then onto front securing points -arrows A-.

Carefully press on securing points by hand until the engine cover noticeably engages.

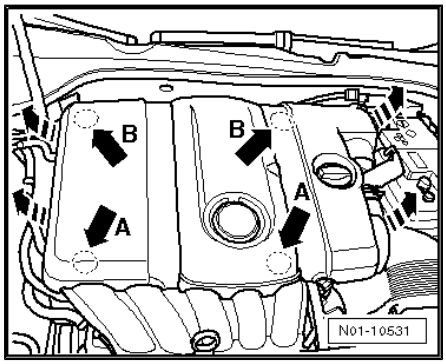

Note

- *Ensure that the air mass meter is not damaged when fitting the engine cover.*
- *The remaining assembly steps are basically a reverse of the dismantling procedure.*

4.26.10 Removing and installing engine cover: 1.9 l PD diesel engines

Protected by copyright. Copying for private or commercial purposes, in part or whole, is not permitted unless authorised by Volkswagen AG. Copyright by Volkswagen AG. Volkswagen AG does not guarantee or accept any liability with respect to the information in this document.

Note

- *There are different versions of engine covers:*
- *1. One-piece engine cover*
- *2. Two-piece engine cover*

One-piece engine cover:

Removing:

– Pull out dipstick -1-.
– Disengage engine cover -arrow 2- and lift.
– Then pull off forwards -arrow 3-.

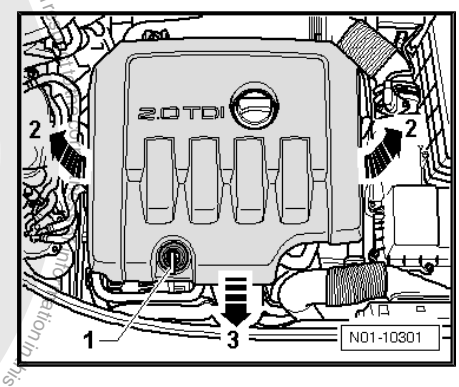

Downloaded from www.Manualslib.com manuals search engine

Installing:

– Fit engine cover at securing points and press on, so that the cover engages.

– Slide oil dipstick -1- into guide tube.

Two-piece engine cover:

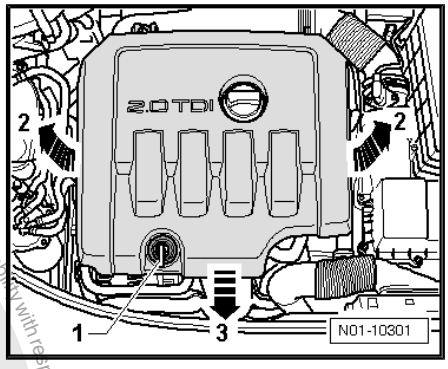

Removing:

Note

The engine cover consists of two individual parts.

- 1. The outer part -A-, here shaded in illustration
- 2. The centre part -B-, here not shaded in illustration

– Disengage engine cover carefully at individual securing points and raise as follows.

- -1-, -3-, -2-, -4-.

– Remove outer part -1-.

– Disengage centre part -2- also carefully and remove.

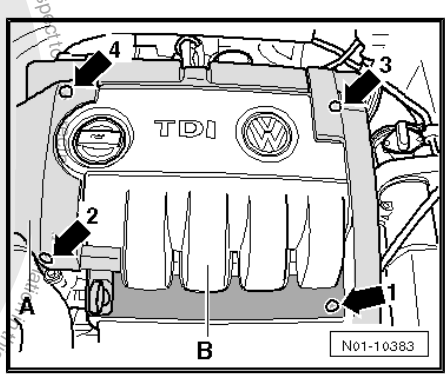

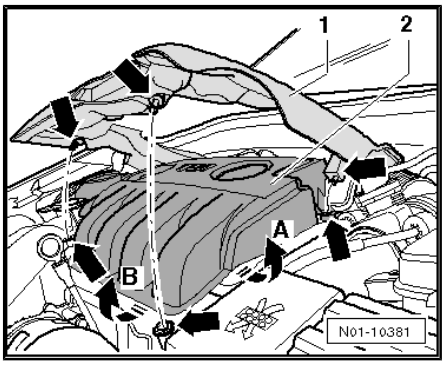

Installing:

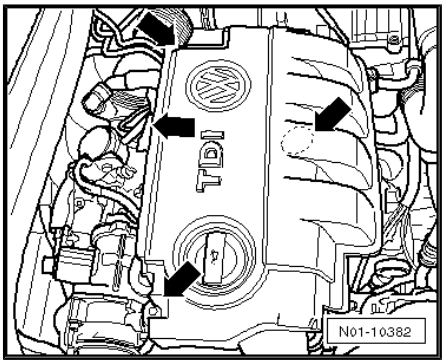

Protected by copyright. Copying for private or commercial purposes, in part or in whole, is not permitted unless authorised by Volkswagen AG. Volkswagen AG does not guarantee or accept any liability with respect to this document. Copyright by Volkswagen AG.

Downloaded from www.Manualslib.com manuals search engine

– Fit engine cover onto securing points -arrows- and press on.
– Then fit outer part -1- at securing points -arrows- and press on, so that cover engages.

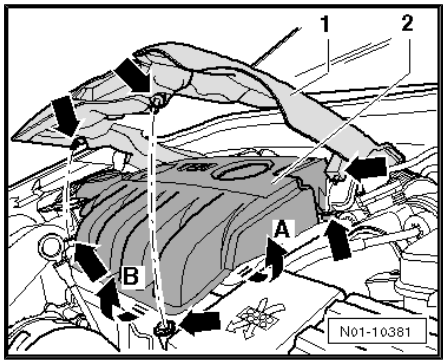

4.26.11 Removing and installing engine cover: 2.0 l PD diesel engines

Removing:

– Pull out oil dipstick.
– Disengage engine cover -A- at securing points -arrows 1 to 4- and raise.
– Then pull off forwards -upper arrow in illustration-.

Installing:

– First fit engine cover -A- at securing point -upper arrow in illustration-.
– Then fit engine cover -A- at the other securing points -arrows 1 to 4- and press on, until it noticeably engages.

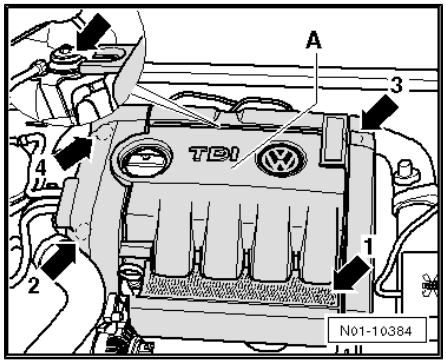

4.26.12 Removing and installing engine cover: 2.0 l PD diesel engines (Golf GT)

Removing:

Note

The engine cover consists of two individual parts.

– First remove the outer cover, highlighted in the illustration. When doing this, observe the securing points in circle area.
– Now remove the inner cover, highlighted in the illustration.

Installing:

– First fit the inner cover and then the outer cover and press on, until they noticeably engage.

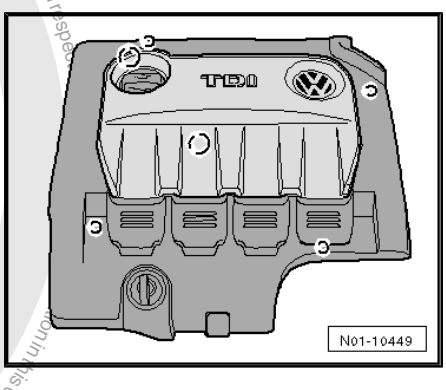

4.27 Removing and installing engine compartment cover -bottom- (noise insulation)

Special tools and workshop equipment required

Protected by copyright. Copying for private or commercial purposes, in part or in whole, is not permitted unless authorised by Volkswagen AG. Volkswagen AG does not guarantee or accept any liability with respect to the correctness of information in this document. Copyright by Volkswagen AG.

Downloaded from www.Manualslib.com manuals search engine

♦ Torque wrench -V.A.G 1783-

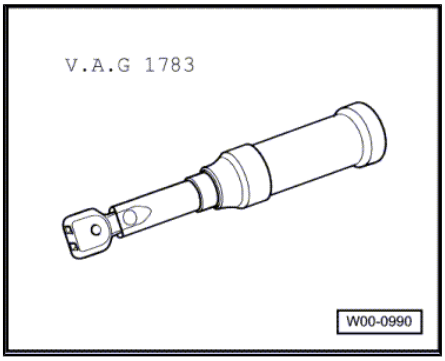

♦ Cordless power driver 12 V / 2.0 Ah -VAS 5826-

Removing

1 - Panel bolts, Qty. 8, torque setting 2 Nm.

2 - Combi-bolts, Qty. 3, torque setting 6 Nm.

– Remove bolts -arrows- with cordless power driver 12 V / 2.0 Ah -VAS 5826- .

– Remove noise insulation rearwards.

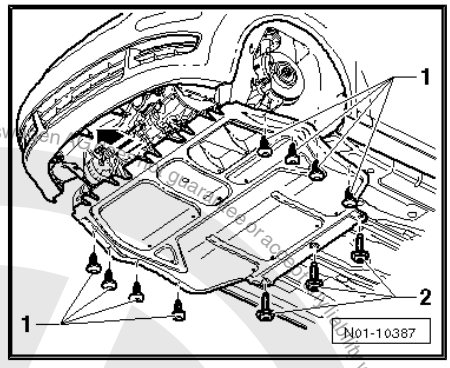

Installing

– Push noise insulation -3- into lock carrier -2- at bottom as shown.

– The smaller lugs -arrow a- must be pushed in underneath and the wider lugs -arrow b- must be pushed in over the edge of lock carrier -2-.

– The retaining lugs on wider lugs must engage in holes of lock carrier.

– Tighten bolts -arrows- to the correct torque setting.

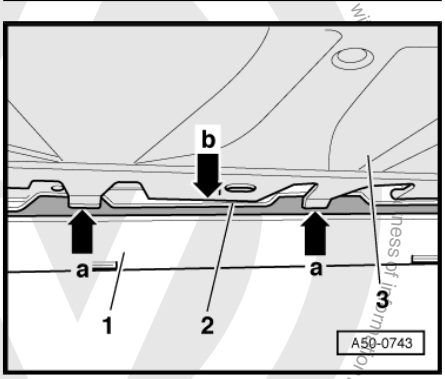

4.28 Engine and components in engine compartment (from above and below): Perform visual check for leaks and damage

Perform visual check as follows:

– Check engine and components in engine compartment for leaks and damage.

– Check lines, hoses and connections of

♦ Fuel system

♦ Cooling and heating system

♦ Lubrication system

♦ Air conditioning system

♦ Intake system

♦ and brake system

for leaks, abrasions, porosity and brittleness.

Downloaded from www.Manualslib.com manuals search engine

Note

- *Arrange for defects to be rectified as repair measures.*
- *If fluid loss is greater than can be expected through normal use, determine cause and rectify (repair measure).*

4.29 Engine oil level: Check

Please note the following:

– After shutting off engine, wait at least 3 minutes so that the oil can flow back into the sump.

– Pull out dipstick, wipe with a clean cloth and push dipstick in again to limit stop.

Note

Observe disposal regulations!

– Pull dipstick out again and read oil level.

For dipstick:

A - Oil must not be replenished.

B - Oil may be replenished. It may happen that the oil level afterwards is in the -A- region.

C - Oil must be replenished. It is sufficient if the oil level is in the -B- region (hatched area) afterwards.

There is a danger of damaging the catalytic converter if the oil level is above the -A- marking.

– If oil level is below -C- marking, replenish oil to -A- marking. Oil specification ⇒ page 9 .

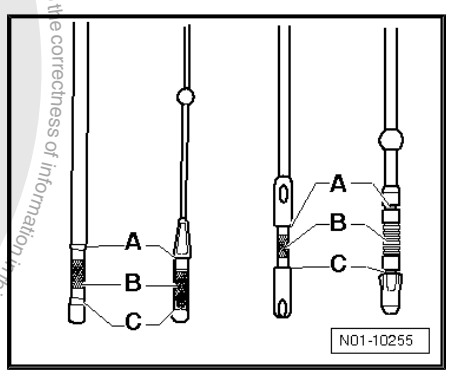

4.30 Engine oil: Drain or extract; renew oil filter and replenish engine oil

Engine oil capacities, “Power unit” ⇒ Power unit; Rep. Gr. 17 ; Oil capacities “Oil capacities” or in “Maintenance table”.

Engine oil: Drain or extract[4)] and replenish ⇒ page 102 .

Renewing oil filter ⇒ page 103 .

Replenishing engine oil ⇒ page 111 .

4) It is not permitted to extract engine oil for the V6 engine.

Protected by copyright. Copyright by Volkswagen AG. Volkswagen AG does not guarantee or accept any liability with respect to the correctness of information in this document. Copyright by Volkswagen AG. Not to be reproduced or distributed in whole or in part or in whole is not permitted unless authorised by Volkswagen AG.

Downloaded from www.Manualslib.com manuals search engine

4.30.1 Draining or extracting engine oil

Caution

- *For engines with standing oil filter the oil filter must be renewed before changing the engine oil ⇒ page 109 , ⇒ page 105 . When removing the filter element a valve is opened, the oil in the filter housing automatically flows into crankcase.*
- *It is not permitted to extract engine oil for the V6 engine.*
- *The oil drain plug is fitted with a secure seal, therefore the oil drain plug must always be renewed.*

Special tools and workshop equipment required

- Used oil collection and extraction unit -V.A.G 1782-

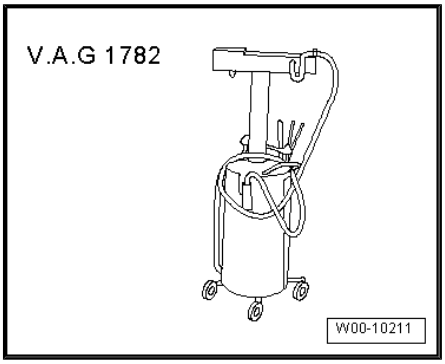

- Oil spill cloth -VAS 6204/1-

Draining or extracting engine oil

Carry out the following procedure:

– Extract engine oil using used oil collection and extraction unit -V.A.G 1782- .

Or

– Remove oil drain plug.

– Let engine oil drain.

– Screw in new oil drain plug with seal hand-tight.

– Replenish engine oil. Specification ⇒ page 9 .

Engine oil capacity: “Power unit” ⇒ Power unit; Rep. Gr. 17 ; Oil capacities “Oil capacities” or in “Maintenance table”.

Specified torques for oil drain plug:

- M14: 30 Nm
- M24: 50 Nm

WARNING

- *Torque specifications must not be exceeded.*
- *Excessive torque can cause leaks in the area of the oil drain plug or even damage.*

Protected by copyright. Copying for private or commercial purposes, in part or in whole, is not permitted unless authorised by Volkswagen AG. Volkswagen AG does not guarantee or accept any liability with respect to the correctness of information in this document. Copyright by Volkswagen AG.

Downloaded from www.Manualslib.com manuals search engine

4.30.2 Renewing oil filter

Renewing oil filter: 1.4 l TSI and 1.4 l TFSI engines ⇒ page 103

Renewing oil filter: 1.6 l injection engines and Flex Fuel engine ⇒ page 105 .

Renewing oil filter: 2.5 l petrol injection engines, 2.0 l FSI and 2.0 TFSI engines ⇒ page 108 .

Renewing oil filter: 1.4 l and 1.6 l FSI engines ⇒ page 105 .

Renewing oil filter: 1.4 l injection engines ⇒ page 107 .

Renewing oil filter: 3.2 l injection engines ⇒ page 110 .

Renewing oil filter: diesel engines ⇒ page 109 .

4.30.3 Renewing oil filter: 1.4 l TSI and 1.4 l TFSI engines

Note

- *Observe disposal regulations!*
- *Oil new O-rings before installing.*
- *Prevent engine oil from dripping onto vehicle parts.*

Type 1

Removing

Remove engine cover, see ⇒ page 89 .

– Unscrew oil filter cover -arrow- using e.g.socket insert 32 mm.

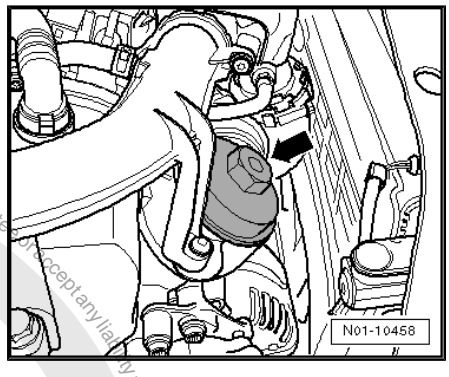

Protected by copyright. Copying for private or commercial purposes, in part or in whole, is not permitted unless authorised by Volkswagen AG. Volkswagen AG does not guarantee or accept any liability with respect to the correctness of information in this document. Copyright by Volkswagen AG.

Downloaded from www.Manualslib.com manuals search engine

– Remove oil filter cover -1- with oil filter element -4- and valve -5-.

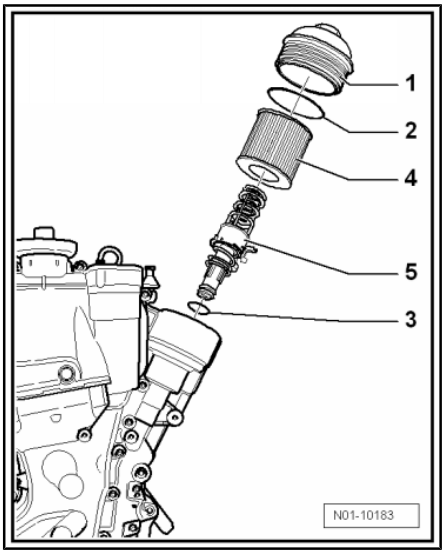

Installing

– Renew O-ring -2- of oil filter cover and O-ring -3- of valve.

– Renew used oil filter element by new filter element -4-.

Note

Observe disposal regulations!

– Tighten oil filter cover -arrow- to 25 Nm.

The remaining assembly steps are basically a reverse of the dismantling procedure.

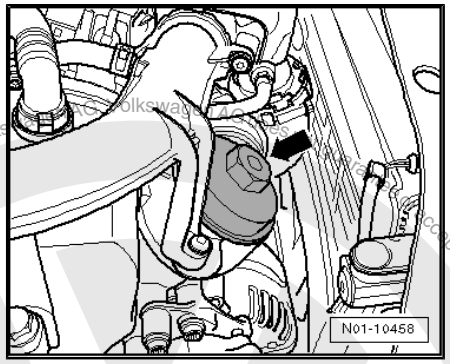

Type 2

Removing

Note

- *Prevent engine oil from dripping onto components.*
- *Cover alternator with cloth before removing.*

– Loosen oil filter -arrow- first, using a strap or oil filter tool -3417- before removing oil filter completely.

– Wait a few minutes, so that engine oil can flow back from filter into engine.

– Then remove oil filter.

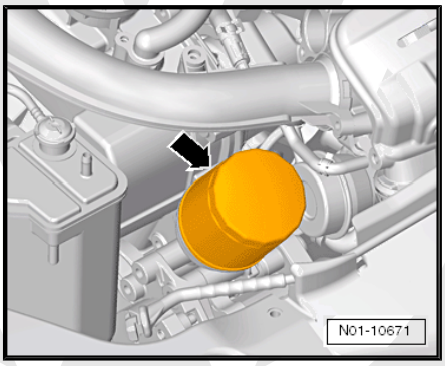

Caution

Ensure that no engine oil drips onto poly V-belt or alternator.

Installing

Note

- *Observe fitting instructions on oil filter!*
- *Observe disposal regulations!*

– Clean oil filter sealing surface on control housing.

– Lightly oil seal on new filter.

Protected by copyright. Copying for private or commercial purposes, in part or in whole, is not permitted unless authorised by Volkswagen AG. Copyright by Volkswagen AG. We do not accept any liability with respect to the correctness of information in this document.

Downloaded from www.Manualslib.com manuals search engine

– Screw in new oil filter -arrow- by hand.
– Then tighten to 20 Nm.

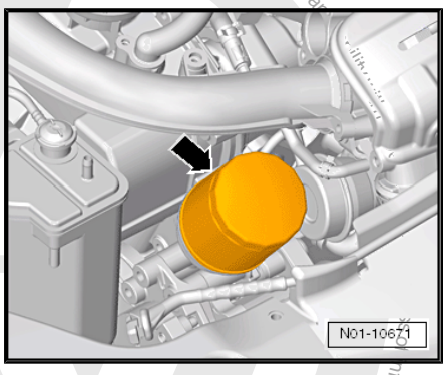

4.30.4 Renewing oil filter: 1.6 l injection engines and Flex Fuel engine

Special tools and workshop equipment required

♦ Oil filter tool -VAS 3417-

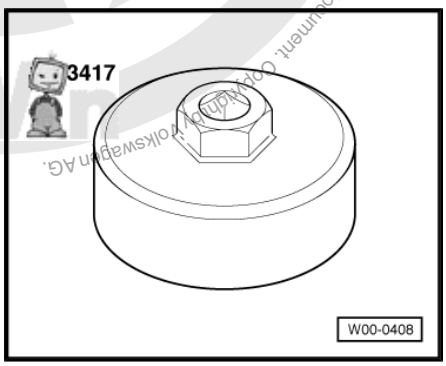

– Loosen oil filter -arrow A- from below using a strap or oil filter tool -VAS 3417-

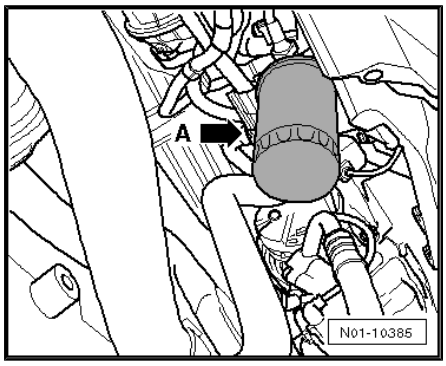

Note

Observe disposal regulations!

– Clean oil cooler sealing surface.
– Oil rubber seal lightly on new filter. This ensures best possible sealing when the filter is tightened.
– Tighten filter by hand.

4.30.5 Renewing oil filter: 1.4 l and 1.6 l FSI engines

Special tools and workshop equipment required

Protected by copyright. Copying for private or commercial purposes, in part or in whole, is not permitted unless authorised by Volkswagen AG. Volkswagen AG does not guarantee or accept any liability with respect to the correctness of information in this document. Copyright by Volkswagen AG.

Downloaded from www.Manualslib.com manuals search engine

- Torque wrench -V.A.G 1331-

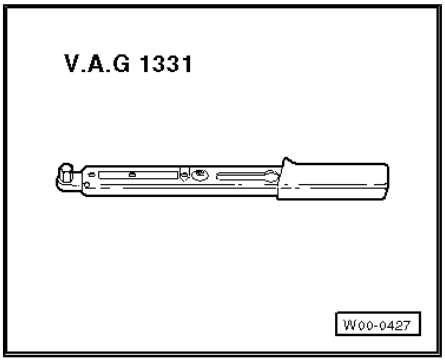

Note

- *Observe disposal regulations!*
- *Oil new O-rings before installing.*
- *Prevent engine oil from dripping onto subframe.*

Removing

Remove engine cover, see ⇒ page 89 .

– Loosen threaded cap -arrow- on hexagonal flats and remove.

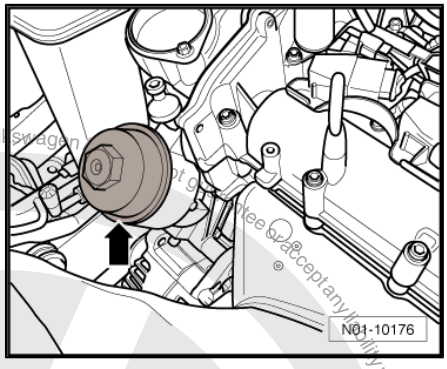

– Take oil filter -4- out of threaded cap -1-.

– Clean sealing surfaces on threaded cap and oil filter housing.

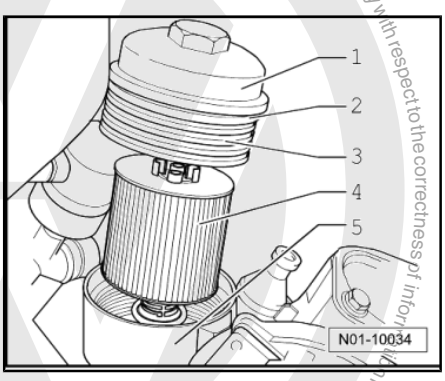

Protected by copyright. Copying for private or commercial purposes, in part or in whole, is not permitted unless authorised by Volkswagen AG. Volkswagen AG does not give any guarantee or accept any liability with respect to the correctness of information in this document. Copyright by Volkswagen AG.

Downloaded from www.Manualslib.com manuals search engine

Installing

– Insert new filter element -4- into threaded cap.
– Renew sealing ring -2-.
– Lightly oil seal.
– Clean thread -3- and lightly moisten with oil.

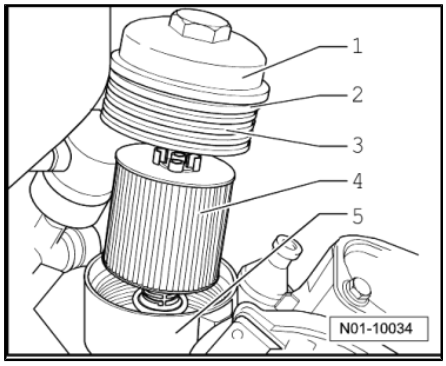

– Tighten threaded cap -arrow- to 25 Nm.

The remaining assembly steps are basically a reverse of the dismantling procedure.

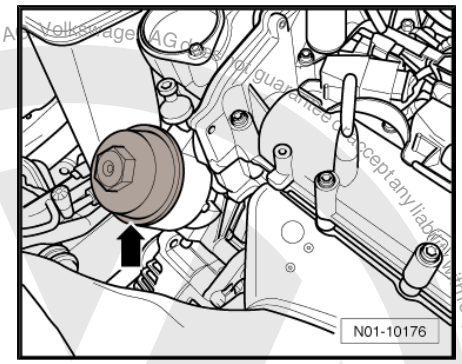

4.30.6 Renewing oil filter: 1.4 l injection engines

Removing

Note

- *Observe disposal regulations!*
- *Oil new O-rings before installing.*
- *Prevent engine oil from dripping onto components in engine compartment.*

– Loosen oil filter -arrow- e.g. using combination spanner, AF 30 -VAS 5399- or ring spanner, 30x32mm -VAS 5410- and remove oil filter.
– Clean engine sealing surface.

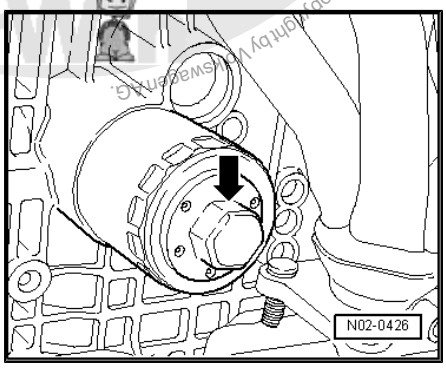

Protected by copyright. Copying for private or commercial purposes, in part or in whole, is not permitted unless authorised by Volkswagen AG. Volkswagen AG does not guarantee or accept any liability with respect to the correctness of information in this document. Copyright by Volkswagen AG.

Downloaded from www.Manualslib.com manuals search engine

Installing

– Oil rubber seal lightly on new filter.

– Screw in filter and tighten hand-tight.

The remaining assembly steps are basically a reverse of the dismantling procedure.

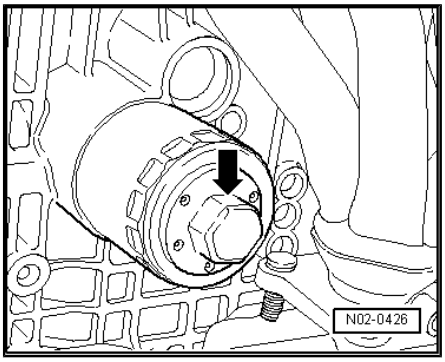

4.30.7 Renewing oil filter: 2.5 l petrol injection engines, 2.0 l FSI and 2.0 l TFSI engines

Special tools and workshop equipment required

♦ Oil drain adapter -T40057-

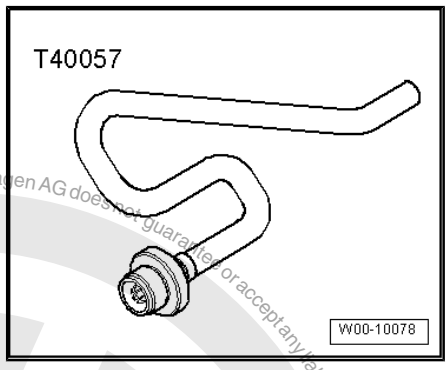

♦ Oil filter tool -VAS 3417-

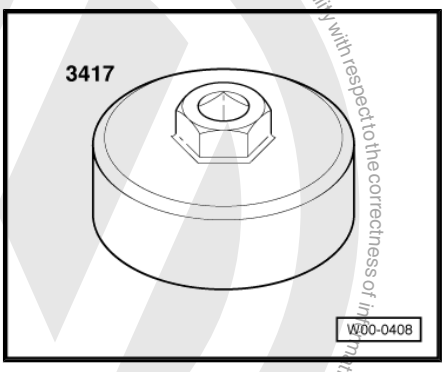

♦ Torque wrench -V.A.G 1331/-

Perform the following procedure:

– Remove dust cap -arrow- from oil filter housing.

Before removing the oil filter housing, it must be drained.

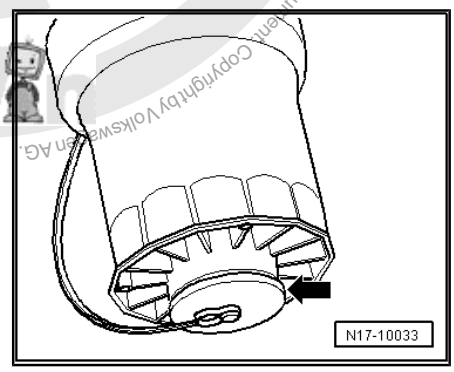

Protected by copyright. Copyright by Volkswagen AG. Volkswagen AG does not guarantee or accept any liability with respect to the correctness of information in this document. Copying for private or commercial purposes, in part or in whole, is not permitted unless authorised by Volkswagen AG.

Downloaded from www.Manualslib.com manuals search engine

– Insert oil drain adapter -T40057- into oil filter housing and hold hose in oil drip tray.

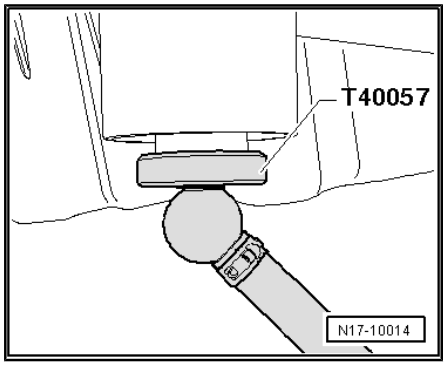

Note

When the oil drain adapter -T40057- is screwed in, a valve is opened in oil filter housing. When the oil drain adapter -T40057- is removed again, the valve closes automatically.

– Drain engine oil.

– Unscrew oil drain adapter -T40057- again.

– Unscrew oil filter housing using oil filter tool -VAS 3417- .

– Renew oil filter element -4- and seal -3-.

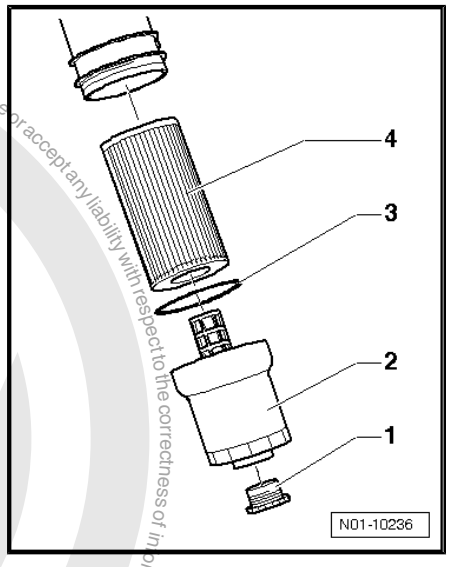

Note

Observe disposal regulations!

– Tighten oil filter housing -2- to 25 Nm.

– Insert dust cap -1- into oil filter housing -2- hand-tight.

Protected by copyright. Copying for private or commercial purposes, in part or in whole, is not permitted unless authorised by Volkswagen AG. Volkswagen AG does not guarantee or accept any liability with respect to the correctness of information in this document. Copyright by Volkswagen AG.

4.30.8 Renewing oil filter: diesel engines

Removing

Note

- *Observe disposal regulations!*
- *Oil new O-rings before installing.*

– Unscrew retainer from intake manifold -1-.

– If necessary, unclip cable so that there is sufficient room to remove the oil filter sealing cap.

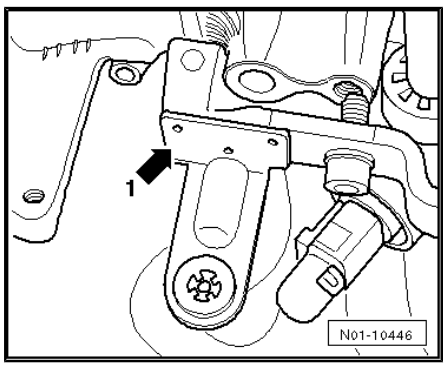

Downloaded from www.Manualslib.com manuals search engine

– Loosen cover cap -arrow-.

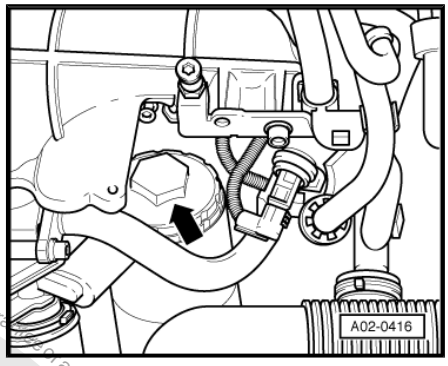

Note

Before draining or extracting release sealing cap, so that the engine oil can flow out of filter housing.

– Clean sealing surfaces on threaded cap and oil filter housing.

Installing

– Renew filter element -3-.

– Renew O-rings -2 and 4-.

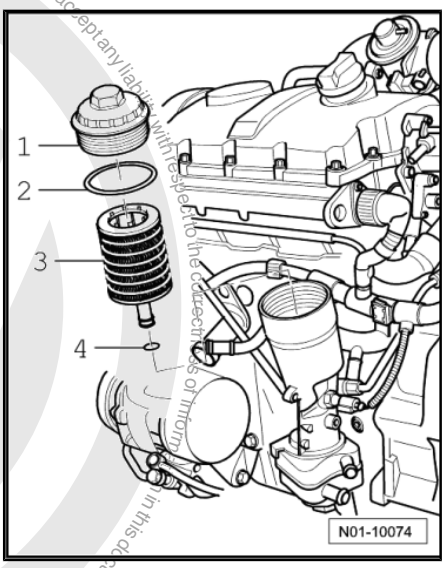

– Install threaded cap -arrow- and tighten to 25 Nm.

The remaining assembly steps are basically a reverse of the dismantling procedure. When installing retainer, ensure for correct seating of guide lug in intake manifold.

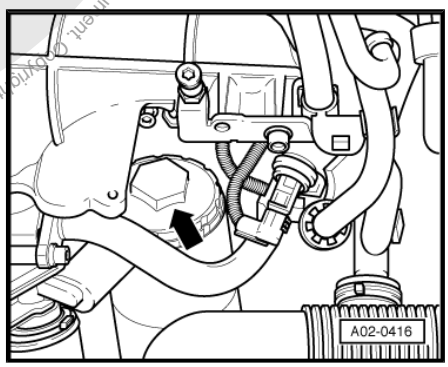

4.30.9 Renewing oil filter: 3.2 l injection engines

Removing

Note

- *Observe disposal regulations!*
- *Oil new O-rings before installing.*
- *Prevent engine oil from dripping onto subframe.*

Protected by copyright. Copying for private or commercial purposes, in part or in whole, is not permitted unless authorised by Volkswagen AG. Volkswagen AG does not guarantee or accept any liability with respect to the correctness of information in this document. Copyright by Volkswagen AG.

Downloaded from www.Manualslib.com manuals search engine

– Drain oil via plug -1-.
– Loosen filter lower part -3- on hexagon -2- or on circumference -4- and remove.
– Take out used filter element.
– Wipe filter housing with a cloth.

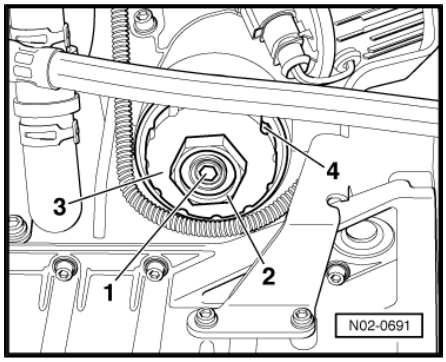

Installing

– Install new filter element-2- and new O-ring -3-.
– Tighten filter lower part -4- on hexagon to 25 Nm.
– Fit drain plug -6- with new seal -5- and tighten to 10 Nm.

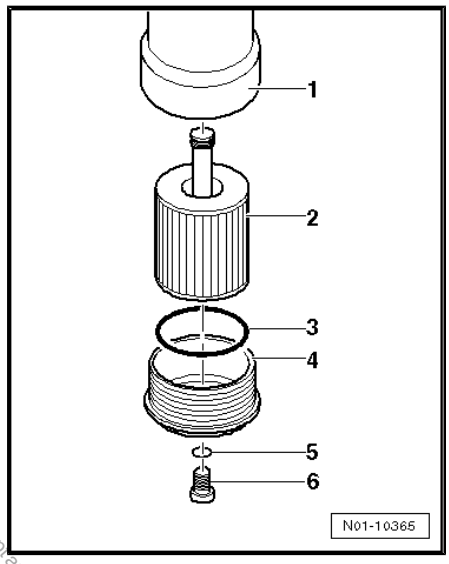

4.30.10 Replenishing engine oil

Oil specifications ⇒ page 9

Engine oil capacity: “Power unit” ⇒ Power unit; Rep. Gr. 17 ; Oil capacities “Oil capacities” or in “Maintenance table”.

General notes

Note

Observe disposal regulations!

– After replenishing with oil, wait at least 3 minutes and then check oil level.
– Pull out dipstick, wipe with a clean cloth and push dipstick in again to limit stop.
– Pull dipstick out again and read oil level.

Protected by copyright. Copying for private or commercial purposes, in part or in whole, is not permitted unless authorised by Volkswagen AG. Volkswagen AG does not guarantee or accept any liability with respect to the correctness of information in this document. Copyright by Volkswagen AG.

Downloaded from www.Manualslib.com manuals search engine

For dipstick as illustrated:

A - Oil must not be replenished.

B - Oil may be replenished. It may happen that the oil level afterwards is in the -A- region.

C - Oil must be replenished. It is sufficient if the oil level is in the -B- region (hatched area) afterwards.

There is a danger of damaging the catalytic converter if the oil level is above the -A- marking.

– If oil level is below -C- marking, replenish oil to -A- marking. Oil specification ⇒ page 9 .

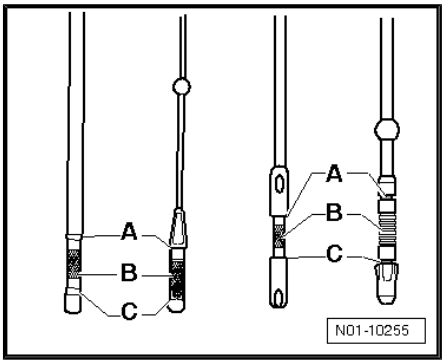

4.31 Performing road test (driving behaviour, noises, air conditioner etc.)

Which of the following can be checked depends on vehicle equipment and local conditions (urban/country).

Check the following during a road test:

– Engine: Output, misfiring, idling speed, acceleration.
– Clutch: Pulling away, pedal pressure, odours.
– Gear selection: Ease of operation, stick position.
– Automatic gearbox: Selector lever position, shift lock/ignition key removal lock, shift behaviour, dash panel insert display.
– Foot brake and handbrake: Function, free travel and effectiveness, pulling to one side, juddering, squeal.
– ABS function: Pulsing must be felt at the brake pedal during ABS-regulated braking.
– Steering: Function, steering free play, steering wheel centred when vehicle is travelling straight ahead.
– Tilting roof: Function
– Radio/radio navigation system: Function, reception, GALA, interference noise
– Multi-function indicator (MFI): Functions
– Air conditioning system: Check function. (At low temperatures the function of air conditioner must be checked in a workshop).
– Vehicle: Pulling to one side when travelling straight-ahead (level road)
– Imbalance: Wheels, drive shafts, propshaft
– Wheel bearings: Noises
– Engine: Hot starting behaviour

4.32 Wheel securing bolts: Tighten to prescribed torque setting

Removing and installing wheel bolt caps

Note

Depending on vehicle equipment, the wheel bolts can be covered by the following components:

♦ Wheel bolt caps

Copyright by Volkswagen AG. Volkswagen AG does not guarantee or accept any liability with respect to the correctness of information in this document. Copyright by Volkswagen AG. Reproduction, in part or in whole, is not permitted without the express authorisation of Volkswagen AG. Copyright by Volkswagen AG. Reproduction, in part or in whole, is not permitted without the express authorisation of Volkswagen AG.

Downloaded from www.Manualslib.com manuals search engine

- ♦ Hub cap
- ♦ Full wheel trim
- – Remove the respective wheel bolt cover, if fitted.

Note

The puller hook to remove the cover caps or the wheel hub trim is located in the vehicle tool kit.

Example, removing hub cap

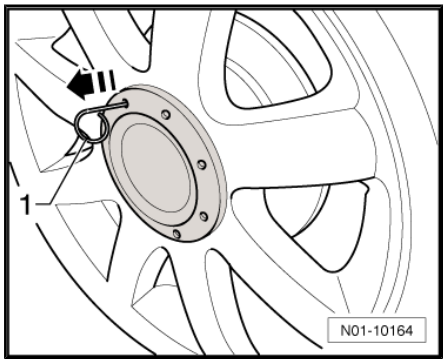

- – Hook puller hook into one drilling of wheel hub trim and pull off in -direction of arrow-.

Fitting instructions

Note

- ♦ *The cover caps protect the wheel bolts and should be reconnected after the wheel securing bolts have been retightened.*
- ♦ *Ensure that on some rims the lug of the wheel hub trim locates in the groove of the rim.*
- ♦ *Place puller hooks and adapter with vehicle tool kit after completing work.*

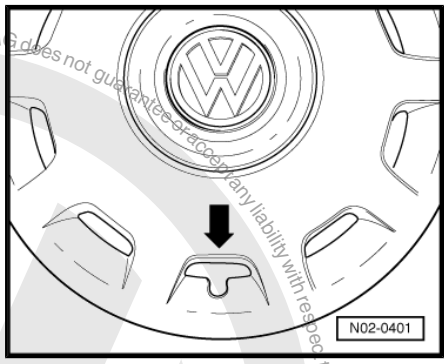

- – On vehicles with full wheel trim install full wheel trim so that the tyre filler valve is guided through the cut-out provided -arrow-.

Loosening or tightening anti-theft wheel bolts

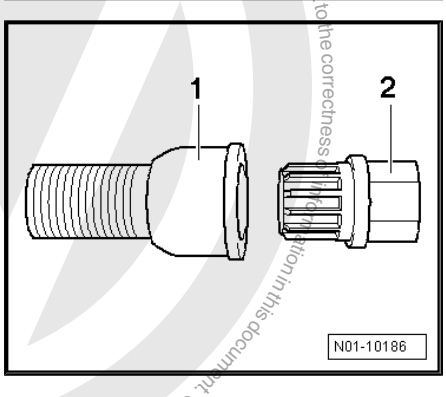

Note

- ♦ *The adapter to loosen and tighten the anti-theft wheel bolts can be found in the vehicle tool kit.*
- ♦ *If the adapter to loosen or tighten the anti-theft wheel bolts is not available in the vehicle, use the adapter set for tamper-proof wheel bolts -T10101- .*
- ♦ *If the adapter is not available, a new replacement adapter can only be obtained via the code number.*
- ♦ *The adapter code number to loosen and tighten the anti-theft wheel bolts is stamped on the front side of the adapter.*

Special tools and workshop equipment required

Protected by copyright. Copying for private or commercial purposes, in part or in whole, is not permitted unless authorised by Volkswagen AG. Volkswagen AG does not guarantee or accept any liability with respect to the correctness of information in this document. Copyright by Volkswagen AG.

Downloaded from www.Manualslib.com manuals search engine

Protected by copyright. Copying for private or commercial purposes, in part or in whole, is not permitted unless authorised by Volkswagen AG. Volkswagen AG does not guarantee or accept any liability with respect to the accuracy of information in this document. Copyright by Volkswagen AG.

- Adapter set for tamper-proof wheel bolts -T10101-

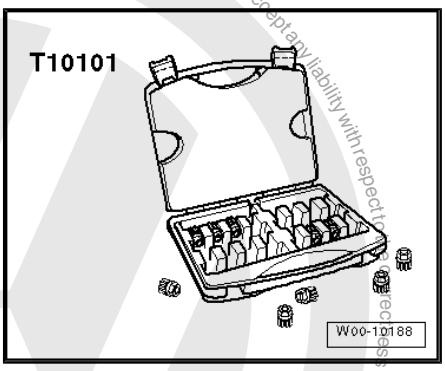

– Slide adapter into anti-theft wheel bolt onto stop.
– Slide the wheel bolt wrench onto adapter onto stop.
– Retighten the wheel securing bolts to correct torque setting.

Retightening wheel securing bolts

Special tools and workshop equipment required

- Torque wrench -V.A.G 1332-

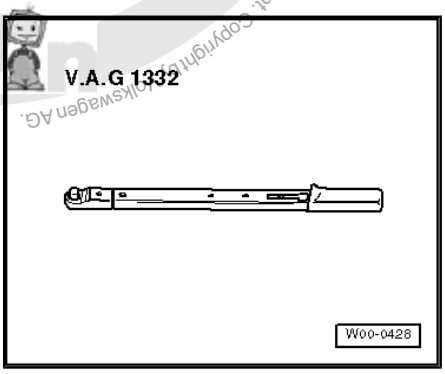

Note

Ensure that wheel bolts are tightened diagonally and alternately.

Specified torque: 120 Nm

4.33 Reading radio code using vehicle diagnostic tester

Authorization prerequisites for vehicle diagnostic tester

- The vehicle diagnostic tester is connected via the Central Partner Network (CPN) with the central database (Carport, Fazit).
- Available access for the user of the system “GeKo” (secrecy and component protection)

Note

- *The radio codes can be read in the central database and can be displayed on vehicle diagnostic tester .*
- *For radio activation the codes must be entered via radio buttons, as previously* *⇒ page 115* *.*

Downloaded from www.Manualslib.com manuals search engine

Procedure

– Connect vehicle diagnostic tester ⇒ page 32 .

– Switch on ignition.

– Touch the field or button on the screen for “GUIDED FUNCTIONS”.

– Confirm with [>] button.

– Select one after the other:

♦ Brand

♦ Type

♦ Model year

♦ Engine code

– Confirm vehicle identification.

– Select one after the other:

♦ “Radio system”.

♦ “Reading radio code”

– Read code according to the information of “GUIDED FUNCTIONS”.

– Finish code reading as follows:

– Press “GoTo” button on display -arrow-.

– Press the “End” button on display.

– Press “End” button in End menu.

– Switch off ignition and separate diagnostic connections.

4.34 Radio/radio navigation system: Enter PIN of anti-theft coding and store local radio stations to station buttons

The anti-theft coding electronically prevents unauthorized persons from operating the unit after it has been removed from vehicle. The anti-theft codes are also called radio codes or security codes. Security code means that each unit with an anti-theft coding is programmed with its own code number. This security code is not active when leaving the factory. The security code is found on the unit card, if fitted. If the unit card is not fitted, the security code can be read using vehicle diagnostic tester of a central database.

Note

If an incorrect code number is entered when releasing the electronic lock, the whole procedure can be repeated once. If an incorrect code number is entered again, the unit is locked for about one hour. That means, it cannot be used. After one hour, during which time the unit must remain switched on, the display extinguishes. The electronic lock can be released as described above. The cycle two attempts, one hour lock applies again.

Procedure

Vehicle electrics → Communication ⇒ Rep. Gr. 91 → e.g. radio system "RCD 500" → Electronic anti-theft coding → Deactivating electronic anti-theft coding

Protected by copyright. Copying for private or commercial purposes, in part or in whole, is not permitted unless authorised by Volkswagen AG. Volkswagen AG does not guarantee or accept any liability with respect to the correctness of information in this document. Copyright by Volkswagen AG.

Downloaded from www.Manualslib.com manuals search engine

For technical reasons it is possible that several cross references are not directed to the correct chapter. In this case select the procedure manually in the information.

4.35 Tyre pressure monitoring: Perform basic setting

⇒ “4.35.1 Tyre pressure monitoring (TPM) for NAR”, page 117

Note

- *The basic setting of tyre pressure monitoring -K220- should only be performed after the tyre inflation pressures have been corrected to the prescribed values.*
- *If no pressure loss and tyre damage are found after a tyre pressure warning, the incorrect warning can be rectified by a basic setting.*

The tyre pressure monitoring system is part of the software in the ABS control unit -J104-.

The ABS control unit compares the speed and the rolling circumference of the individual wheels via the ABS sensors. When the rolling circumference of one wheel is changed this is displayed by the tyre pressure monitoring. The rolling circumference of tyre can change if:

- The tyre pressure is too low.
- The tyre has structural damage.
- The vehicle is loaded more heavily on one side.
- The wheels on one axle are loaded more heavily (e.g. when towing a trailer or when driving in mountains).
- Snow chains are fitted.
- The temporary spare wheel is fitted.
- One wheel per axle has been changed.

The tyre pressure monitoring warning lamp -K220- has a yellow warning lamp in the dash panel insert -arrow-.

- “FLASHING LIGHT” means that the “INITIAL BASIC SETTING” has not been performed.
- “PERMANENT LIGHT” in conjunction with a warning tone means “WARNING”, pressure loss has been recognised, check tyre pressures, perform system basic setting.

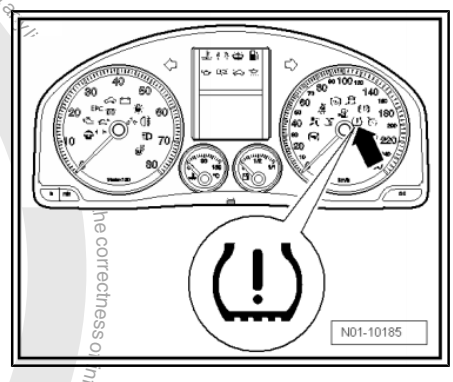

Perform “INITIAL” basic setting

– Switch on ignition.

Protected by copyright. Copyright for private or commercial purposes, in part or in whole is not permitted unless authorised by Volkswagen AG. Volkswagen AG does not guarantee or accept any liability with respect to the correctness of information in this document. Copyright by Volkswagen AG.

Downloaded from www.Manualslib.com manuals search engine

– Press button ESP -1- and button SET -2- simultaneously and for longer than 2 seconds in the centre console.

If ESP is not fitted, press TCS button.

The start of basic setting will be confirmed by an acoustic signal.

When switching on ignition again, no warning is shown.

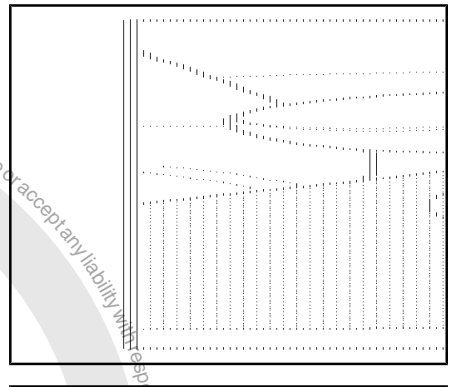

Perform basic settings

– Switch on ignition.

– After changing the tyre pressures or after changing one or several wheels, the button for tyre pressure monitoring SET item -2- in illustration, must be pressed and hold until a confirmation tone is heard.

When switching on ignition again, no warning is shown.

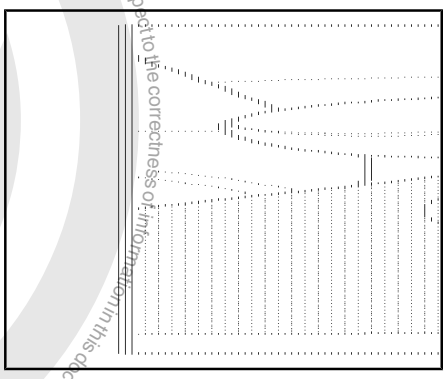

4.35.1 Tyre pressure monitoring (TPM) for NAR

Note

- *The basic setting of tyre pressure monitoring should only be performed after the tyre inflation pressures have been corrected to the prescribed values.*
- *If no pressure loss and tyre damage are found after a tyre pressure warning, the incorrect warning can be rectified by a basic setting.*

The tyre pressure monitoring warning lamp -K220- has a yellow warning lamp in the dash panel insert -arrow-.

After changing the tyre pressures or after changing one or more wheels the following adaption must be performed:

– Connect vehicle diagnostic tester ⇒ page 32 .

– Switch on ignition.

– Touch the field or button on the screen for `Guided fault finding`.

– Select vehicle data.

All control units in vehicle are read.

– Follow instructions of vehicle diagnostic tester in “Guided fault finding”.

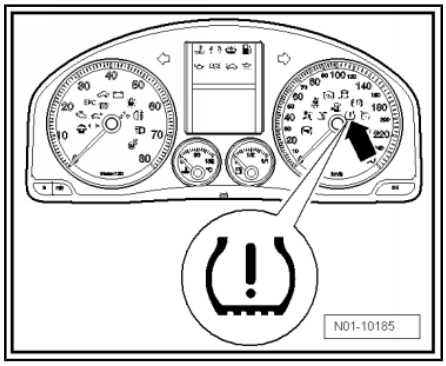

Protected by copyright. Copying for private or commercial purposes, in part or in whole, is not permitted unless authorised by Volkswagen AG. Volkswagen AG does not guarantee or accept any liability with respect to the correctness of information in this document. Copyright by Volkswagen AG.

Downloaded from www.Manualslib.com manuals search engine

4.36 Tyre repair set: Check bottle for damage and if used; check and enter date of tyre sealant

The tyre repair set is located in the spare wheel well -arrow-

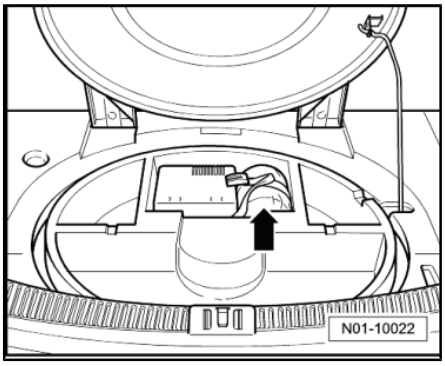

The tyre repair set consists of the compressor and a tyre filler bottle with sealant.

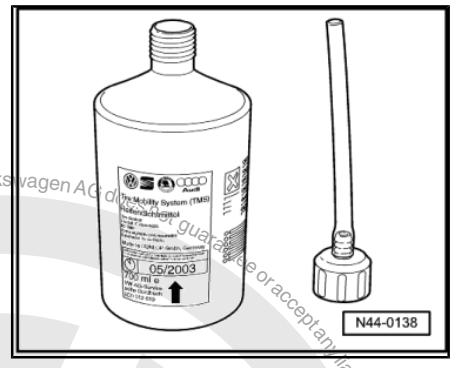

Note

- *The tyre sealant in the bottle has a limited expiry date.*
- *Therefore the expiry date is indicated on the bottle -arrow-.*

This example shows that the expiry date 05/2003 has been exceeded, then the bottle has to be renewed.

– Check the expiry date and enter this in maintenance tables.

– Renew tyre sealant if the expiry date has been reached.

Caution

- ***The tyre sealant must not be more than 4 years old.***
- ***If the bottle was opened e.g. at a "flat tyre", it must also be renewed.***

Note

- *Residual tyre sealant or bottles which are filled and the expiry date has been exceeded, must be disposed of.*
- *Old tyre sealant or residual sealant must not be mixed and disposed of with other fluids.*
- *Observe disposal regulations!*

4.37 Dust and pollen filter: Clean housing and renew filter element

Procedure

Heating, ventilation, air conditioning system ⇒ Rep. Gr. 80 → Repairing heating system → Removing and installing dust and pollen filter

Note

For technical reasons it is possible that several cross references are not directed to the correct chapter. In this case select the procedure manually in the information.

Protected by copyright. Copying for private or commercial purposes, in part or in whole, is not permitted unless authorised by Volkswagen AG. Volkswagen AG does not guarantee or accept any liability with respect to the correctness of information in this document. Copyright by Volkswagen AG.

Downloaded from www.Manualslib.com manuals search engine

4.38 Headlight adjustment: Check

- Checking headlight adjustment ⇒ page 119
- Headlights with gas discharge bulbs, perform basic setting ⇒ page 122 .
- Adjusting headlights ⇒ page 122
- Adjusting fog lights and other additional lights ⇒ page 124 .

4.38.1 Checking headlight adjustment

Special tools and workshop equipment required

- Headlight adjustment unit -VAS 5046- or

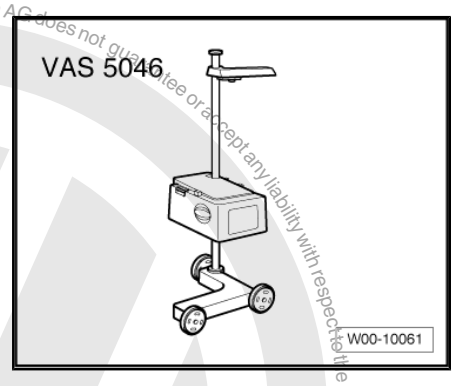

- Headlight adjustment unit -VAS 5047-

Checking and adjusting prerequisites:

- Tyre pressures OK.
- Lenses must not be damaged or dirty.
- Reflectors and bulbs OK.
- Vehicle must be loaded.

The vehicle must be rolled forward or backward several metres or front and rear springs must be bounced fully several times so that springs settle.

- Vehicle and headlight adjuster must be on a level surface.
- Vehicle and headlight adjuster must be aligned.
- Inclination must be set.
- If the vehicle is equipped with separate dipped and main beam, adjust main beam additionally. When adjusting main beam ensure that the adjustment unit is set to 0 %.

– Observe headlight adjuster operating instructions!

Inclination information in “%” is stamped into trim above headlight. Headlights must be adjusted according to this information. Percentage given is based on a projection distance of 10 metres. For example: inclination of 1.0 % converts to approx. 10 cm.

Notes for vehicles with halogen headlights:

Manual headlight range control (if fitted):

- The headlight range adjuster thumb wheel must be in basic setting -0-.

Protected by copyright. Copying for private or commercial purposes, in part or in whole, is not permitted unless authorised by Volkswagen AG. Volkswagen AG does not guarantee or accept any liability with respect to the correctness of information in this document. Copyright by Volkswagen AG.

Downloaded from www.Manualslib.com manuals search engine

Protected by copyright. Copyright by Volkswagen AG. Volkswagen AG does not guarantee or accept any liability with respect to the correctness of information in this document. Copyright by Volkswagen AG. Protected by copyright. Copying for private or commercial purposes, in part or in whole, is not permitted unless authorised by Volkswagen AG.

Note

- *For certain export markets a manually regulated headlight range control is not offered, thus the -0- position is discontinued.*
- *For NAR vehicles the side adjustment of headlight is not permitted, therefore the adjustment bolt is secured against turning. Adjustment is only allowed once when the headlight is to be exchanged. When the side adjustment bolt has been adjusted once, it must be secured with a cap ⇒ Electronic parts catalogue ETKA . In this case, push securing cap into opening of lateral adjustment until it is correctly seated.*

Loading: With one person or 75 kg on the driver seat and the vehicle otherwise unloaded (unladen weight).

The unladen weight is the weight of vehicle ready for operation with a full fuel tank (at least 90 %) including weight of all equipment usually carried (e.g. spare wheel, tools, jack, fire extinguisher etc.).

If the fuel tank is not at least 90 % full, then load as follows:

– Read level of fuel in fuel tank on fuel gauge. Determine additional weight from following table and place weight in luggage compartment.

Fuel gauge table

Fuel gauge	Additional weight in kg
1/4	30
1/2	20
3/4	10
Full	0

Example:

When the fuel tank is half full an additional weight of 20 kg must be placed in the luggage compartment.

Note

The additional weight is best produced using fuel canisters filled with water (a 5 litre fuel canister filled with water weighs approx. 5 kg).

Notes on vehicles with headlights with gas discharge bulbs

Note

On vehicles with headlights with gas discharge bulbs the fault memory should be cleared before every headlight adjustment using vehicle diagnostic tester and the headlight range control should be set to basic setting *⇒ page 122* *.*

Downloaded from www.Manualslib.com manuals search engine

Checking headlight adjustment:

Note

- *With dipped beam switched on, the horizontal bright/dark boundary must not exceed the dividing line -1-.*
- *The light beam of the main beam must lie on the centre mark -3-.*

Please check the following:

– Whether, with the dipped beam switched on, the horizontal bright/dark boundary contacts the dividing line -1- of the test area and

– Whether the breaking point -2- between the horizontal part of the blight/dark boundary on the left and the rising part on the right lies on the vertical line of the central point -3-. The bright core of the light beam must be to the right of the vertical line.

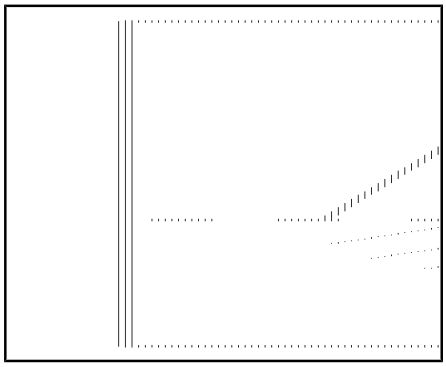

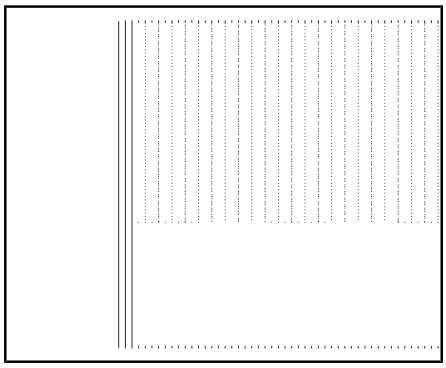

Note

- *To simplify finding the breaking point -2-, cover and uncover left (from driver perspective) half of the headlight a few times. Then check dipped beam again.*
- *After correct adjustment of dipped beams, the centre point of the main beam must lie on the centre mark -3-.*
- *For the previous test screen with 15° setting line, adjust as for new test screen. To avoid incorrect settings, ignore the 15 ° setting line.*

Checking headlight adjustment on fog lights:

– Check whether the upper bright/dark boundary touches the setting line and runs horizontally over the entire width of the test screen.

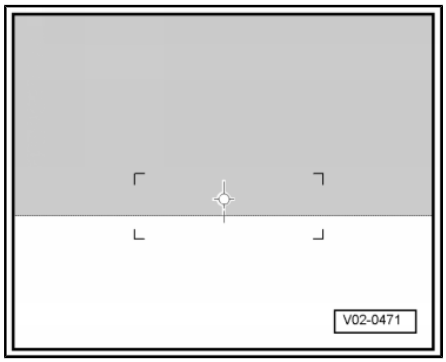

Other additional lights:

Additionally retrofitted lights of other systems must be checked or set according to valid guidelines.

Copyright by Volkswagen AG. Copying for private or commercial purposes, in part or in whole, is not permitted unless authorised by Volkswagen AG. Volkswagen AG does not guarantee or accept any liability with respect to the correctness of information in this document.

Downloaded from www.Manualslib.com manuals search engine

4.38.2 Headlights with gas discharge bulbs, perform basic setting

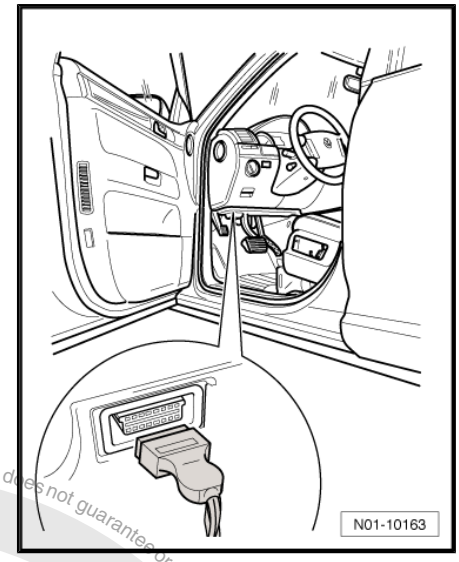

– Connect vehicle diagnostic tester ⇒ page 32 .

– Switch on ignition.

– Press “Guided fault finding”.

Enter vehicle data, all control units will be read.

– Press following keys/designations in sequence given:

♦ GoTo

♦ Function/Component Selection

♦ Body

♦ Electrical system

♦ 01 - Systems capable of self-diagnosis

♦ 55 - Dynamic headlight range control

♦ J 431 - Dynamic headlight range control, functions

♦ J 431 - Control unit for headlight range control, basic setting

♦ Press ⇥ button.

– Follow the sequence of vehicle diagnostic tester and confirm entry until the following text appears:

J 431 - Control unit for headlight range control, basic setting

♦ Press ⇥ button.

– Follow the sequence of vehicle diagnostic tester and confirm entry until the following text appears:

J 431 - Control unit for headlight range control, basic setting

– Follow the sequence of vehicle diagnostic tester .

– Now check headlight adjustment and adjust if necessary.

– Complete the function programme J431 - control unit for headlight range control, basic setting.

– Adjusting headlights ⇒ page 122

4.38.3 Adjusting headlights

♦ General information on gas discharge lamp lighting systems ⇒ page 122

♦ Adjusting left headlight, Golf 2004 ➤ ⇒ page 123

♦ Adjusting left headlight, Golf Plus 2005 ➤ ⇒ page 123

General information on gas discharge lamp lighting systems

The gas discharge lamp system uses xenon-filled bulbs.

For this reason the headlights with gas discharge bulbs are also called xenon headlights.

There are different headlight versions:

♦ “Xenon” headlights

“Xenon” headlights means that the dipped beam is generated from “one” gas discharge lamp.

“Xenon” headlights have an “additional main beam”.

Protected by copyright. Copying for private or commercial purposes in part or in whole, is not permitted unless authorised by Volkswagen AG. Volkswagen AG does not guarantee or accept any liability with respect to the correctness of information in this document. Copyright by Volkswagen AG.

Downloaded from www.Manualslib.com manuals search engine

- “Bi-xenon” headlights

“Bi-xenon” means that both the dipped beam and the main beam are generated from a “single” gas discharge lamp.

Therefore on “bi-xenon” headlights the main beam is automatically adjusted together with the dipped beam.

“Bi-xenon lighting systems” are always fitted with a headlight range control and a headlight washer system.

- AFS headlight system

The AFS system is a lighting system with headlights, gas discharge bulbs and static cornering light.

Protected by copyright. Copying for private or commercial purposes, in part or in whole, is not permitted unless authorised by Volkswagen AG. Volkswagen AG does not guarantee or accept any liability with respect to the correctness of information in this document. Copyright by Volkswagen AG.

Note

- *Vehicles with cornering light (static cornering light) can be identified by an additional reflector -arrow- between turn signal -1- and dipped beam module -3-.*
- *The static cornering light only functions in conjunction with the dipped beam.*

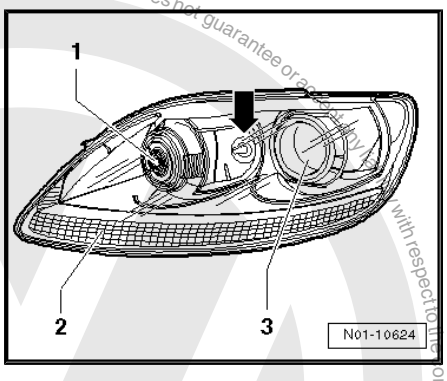

AFS means Adaptive Front Lighting System

The headlights with gas discharge bulbs and cornering light have no “additional main beam”.

Therefore on the “AFS headlight system” the main beam is automatically adjusted together with the dipped beam.

Note

Before adjusting headlights on vehicles with gas discharge headlights, perform basic setting using vehicle diagnostic tester *⇒ page 122* *.*

Adjusting left headlight, Golf 2004 ▸

Note

- *Please check that both headlights move evenly when the manually operated headlight range control is operated.*
- *If the vehicle is equipped with separate dipped and main beam, adjust main beam additionally. When adjusting main beam ensure that the adjustment unit is set to 0 %.*

The adjustment bolts for the right headlight are a mirror image.

- First adjust the height adjustment bolt -2- for dipped beam and main beam, to bright/dark boundary of test area in display of tester.
- Then adjust the lateral adjustment bolt -1- for dipped beam and main beam, to bright/dark boundary of test area in display of tester.

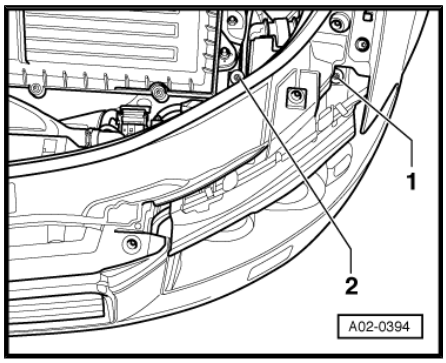

Adjusting left headlight, Golf Plus 2005 ▸

The adjustment bolts for the right headlight are a mirror image.

Downloaded from www.Manualslib.com manuals search engine

- First adjust the height adjustment bolt -A- for dipped beam and main beam, to bright/dark boundary of test area in display of tester.
- Then adjust the lateral adjustment bolt -B- for dipped beam and main beam, to bright/dark boundary of test area in display of tester. To do this, use socket -T10197- .

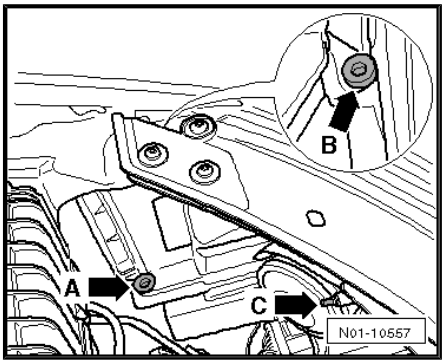

4.38.4 Adjusting fog lights and other additional lights

- Fog lights in headlights ⇒ page 124
- Fog light in bumper, right (Golf 2004 ▸) ⇒ page 124
- Fog light in bumper, right (Golf GT) ⇒ page 125
- Fog light in bumper, right (Golf GTI) ⇒ page 125
- Fog light in bumper, left (Golf Plus 2005 ▸) ⇒ page 126
- Other additional lights ⇒ page 126

Fog lights in headlights

Note

Adjustment of fog lights is performed automatically when adjusting headlights.

Fog light in bumper, right (Golf 2004 ▸)

Location of adjustment screw on left-hand fog light is a mirror image.

Inclination:

- Fog lights 20 cm

– Unclip retaining lugs -arrows- and pull cover off lower part of bumper.

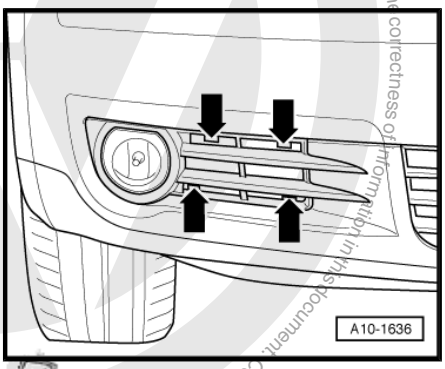

Protected by copyright. Copying for private or commercial purposes, in part or in whole, is not permitted unless authorised by Volkswagen AG. Volkswagen AG does not guarantee or accept any liability with respect to the correctness of information in this document. Copyright by Volkswagen AG.

Downloaded from www.Manualslib.com manuals search engine

– To adjust the headlight range turn adjustment screw -arrow-.

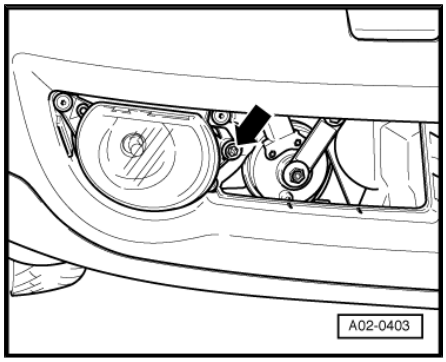

A lateral adjustment is not possible.

Fog light in bumper, right (Golf GT)

Location of adjustment screw on left-hand fog light is a mirror image.

Inclination:

♦ Fog lights 20 cm

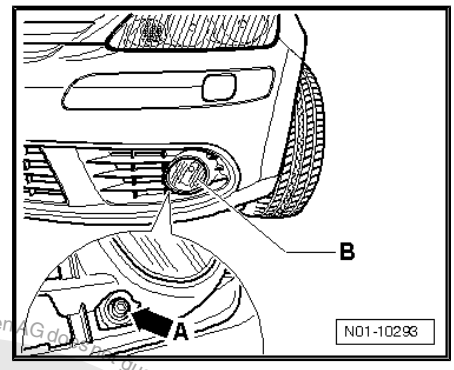

– Remove bolt -1-.

– Unclip retaining lugs -2- and pull cover off lower part of bumper.

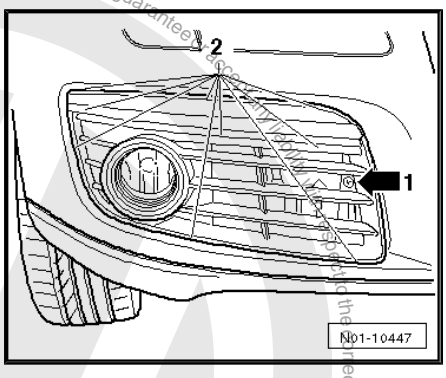

Note

In some cases the retaining lugs are very tight. Therefore, pull cover very carefully to prevent that the retaining lugs break off.

To adjust the headlight range turn adjustment screw -arrow-.

– Secure cover in reverse order.

Fog light in bumper, right (Golf GTI)

Location of adjustment screw on left-hand fog light is a mirror image.

Inclination:

♦ Fog lights 20 cm

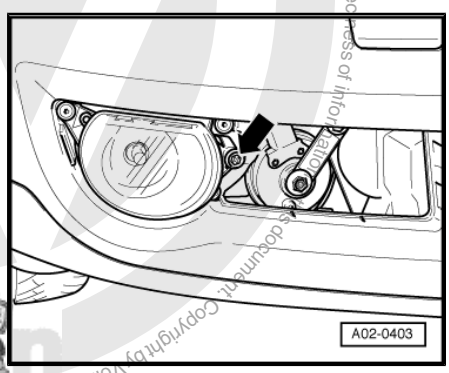

Protected by copyright. Copying for private or commercial purposes, in part or in whole, is not permitted unless authorised by Volkswagen AG. Volkswagen AG does not guarantee the accuracy and completeness of this document. Copyright by Volkswagen AG.

Downloaded from www.Manualslib.com manuals search engine

– Remove bolt -1-.
– Unclip retaining lugs -2- and pull cover off lower part of bumper.

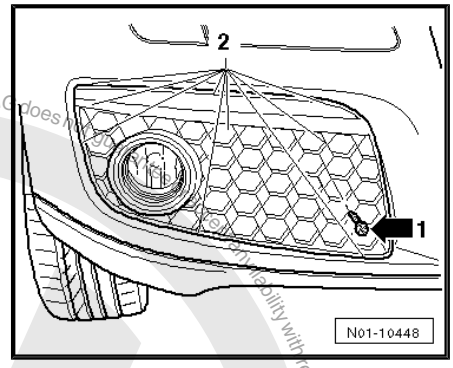

Note

In some cases the retaining lugs are very tight. Therefore, pull cover very carefully to prevent that the retaining lugs break off.

To adjust the headlight range turn adjustment screw -arrow-.

– Secure cover in reverse order.

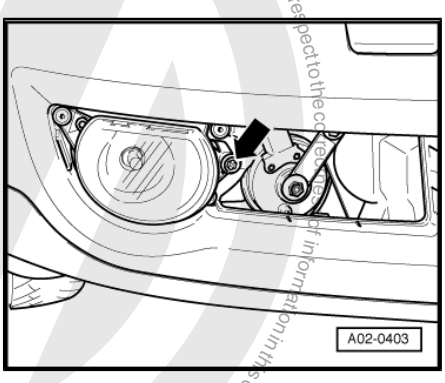

Fog light in bumper, left (Golf Plus 2005 ▸)

– To adjust the fog light headlight range -B-, turn adjustment screw -arrow A-.

Other additional lights

Additionally retrofitted lights of other systems must be checked or set according to valid guidelines.

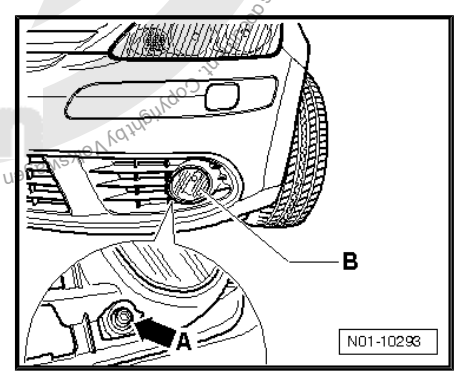

4.39 Service interval display: Reset

The service interval display must be reset (adapted) at

- delivery inspection
- Every service

– Connect vehicle diagnostic tester ⇒ page 32 .
– Switch on ignition.
– Touch the field or button on the screen for “GUIDED FUNCTIONS”.

If the display is not as shown in the procedure: see operating instructions for vehicle diagnostic tester .

– Confirm with [>] button.
– Select one after the other:

- Brand
- Type
- Model year

Downloaded from www.Manualslib.com manuals search engine

- ♦ Engine code
- – Confirm vehicle identification.
- – Select one after the other:
- ♦ “Dash panel insert” -ARROW-.
- ♦ “Resetting the service interval display”.

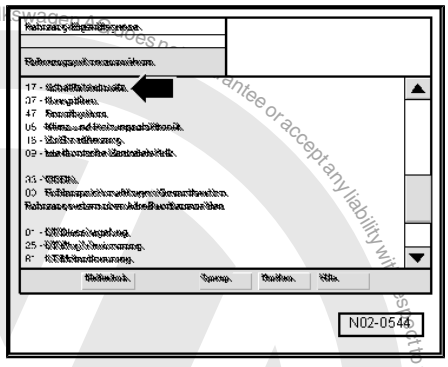

- – Perform adaption according to the information of “GUIDED FUNCTIONS”.

Ending adaption

Indicated on display:

- – Press “GoTo” button on display -arrow-.

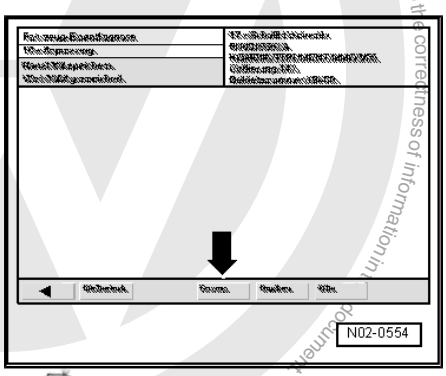

Indicated on display:

- – Press the “End” button on display -arrow-.
- – Press “End” button in End menu.
- – Switch off ignition and separate diagnostic connections.
- – Switch on ignition.

After the ignition is switched on, the type of service is no longer displayed in the distance display in the dash panel insert.

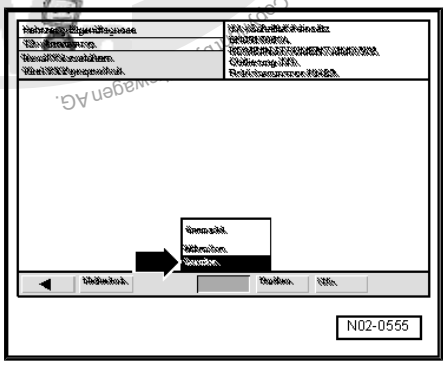

Note

It is also possible to reset the service interval display manually. If the SID is reset manually, it must be taken into account that the vehicle is coded to non-flexible intervals, i.e. every 15,000 km or 12 months.

4.40 Service interval display: Recode

- – Connect vehicle diagnostic tester ⇒ page 32 .
- – Switch on ignition.
- – Touch the field or button on the screen for “GUIDED FUNCTIONS”.

If the display is not as shown in the procedure: see operating instructions for vehicle diagnostic tester .

- – Select one after the other:
- ♦ Brand

Downloaded from www.Manualslib.com manuals search engine

- ♦ Type
- ♦ Model year
- ♦ Engine code
- – Confirm vehicle identification.

If the vehicle identification has been performed correctly, confirm with [>] button.

- – Select one after the other:
- ♦ “Dash panel insert” -ARROW-.
- ♦ “Adapting service interval extension”.
- – Perform adaption according to the information of “GUIDED FUNCTIONS”.

Ending adaption

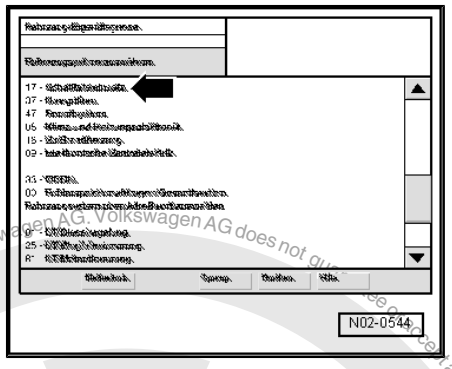

Indicated on display:

- – Press “GoTo” button on display -arrow-.

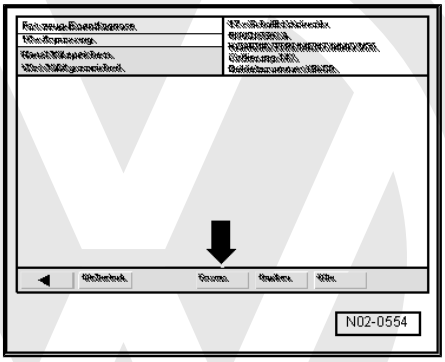

Indicated on display:

- – Press the “End” button on display -arrow-.
- – Press “End” button in End menu.
- – Switch off ignition and separate diagnostic connections.

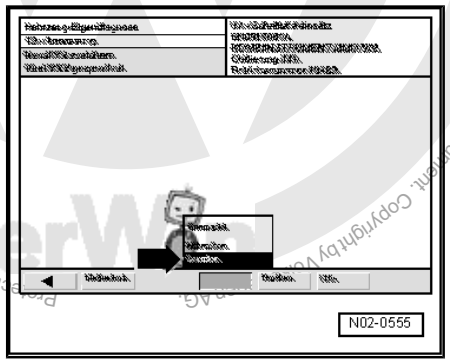

Protected by copyright. Copying for private or commercial purposes, in part or in whole, is not permitted unless authorised by Volkswagen AG. Volkswagen AG does not guarantee or accept any liability with respect to the correctness of information in this document. Copyright by Volkswagen AG.

Downloaded from www.Manualslib.com manuals search engine

4.41 Sunroof: Check function, clean and grease guide rails

Carry out the following procedure:

– Check function of sunroof.

– Clean guide rails -arrows- and lubricate with Lithium grease - G 052 147 A2- .

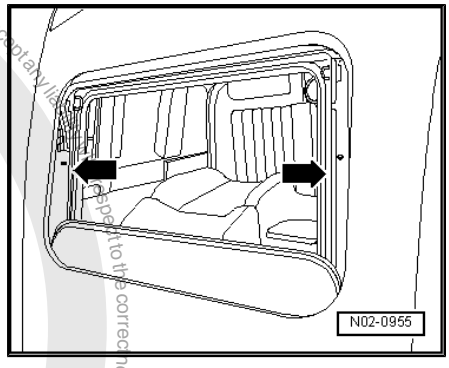

4.42 Sliding sunroof drains: Check flow and clean if necessary

Special tools and workshop equipment required

♦ Cleaning and fitting tool -VAS 6620-

Carry out the following procedure:

– Open sliding sunroof.

– Check sliding sunroof drain holes -arrows- for dirt and clean if necessary.

– Pour tap water into sliding sunroof drains and check if almost the same quantity of water flows out of the wheel housings.

If this is the case, the test is completed. If only a small quantity of water or no water at all flows out of the wheel housings, perform the following procedure:

– Removing plenum chamber cover ⇒ General body repairs, exterior; Rep. Gr. 64 ; Flush bonded windows; Assembly overview - plenum chamber cover

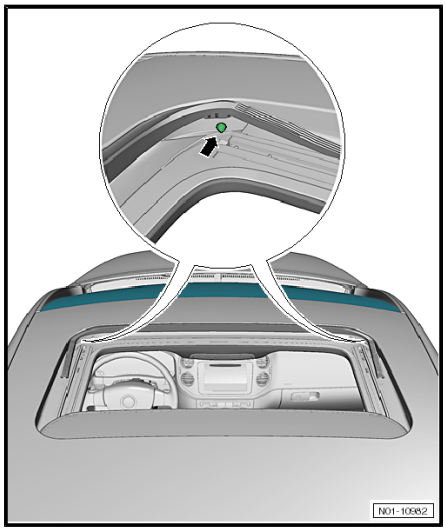

Note

Removal and installation of plenum chamber is performed as a separate charge.

– If fitted, remove cover -1- by loosening fasteners -A and B-.

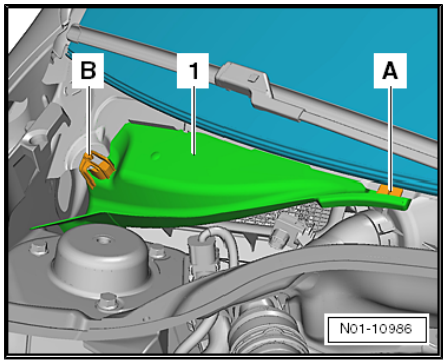

Downloaded from www.Manualslib.com manuals search engine

Protected by copyright. Copying for private or commercial purposes, in part or in whole, is not permitted unless authorised by Volkswagen AG. Volkswagen AG does not guarantee or accept any liability w... in this document. Copyright by Volkswagen AG.

– To press out dirt, guide cleaning and fitting tool -VAS 6620- onto drain valves by pushing and pulling it slowly.

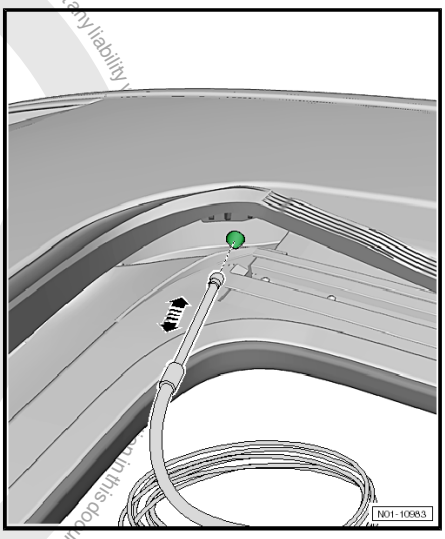

– Drains -arrows- are located on the left and right side, inside the plenum chamber.

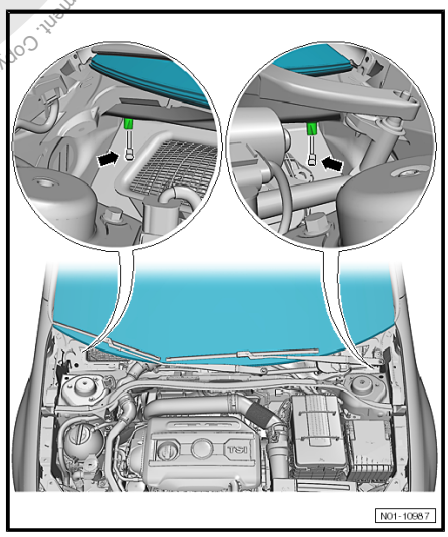

– Check then plenum chamber drains -arrows- for dirt and clean if necessary.

– To check, pour tap water again through the sliding sunroof drain holes.

Install in reverse order.

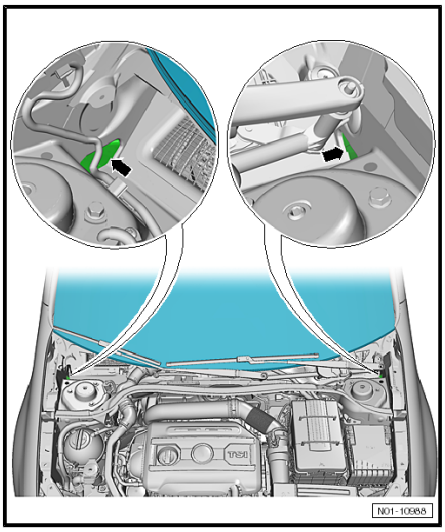

Downloaded from www.Manualslib.com manuals search engine

4.43 Window wash/wipe system and headlight washer system: Check function

Check anti-freeze concentration of Windscreen Clear -G 052 164- , replenish with fluid ⇒ page 131 .

Window wash/wipe system: Check spray jet settings and adjust if necessary ⇒ page 132 .

Headlight washer system: Check spray jet settings and adjust if necessary ⇒ page 134 .

4.43.1 Checking anti-freeze concentration of fluid, replenishing fluid if necessary

Special tools and workshop equipment required

- Refractometer -T10007-

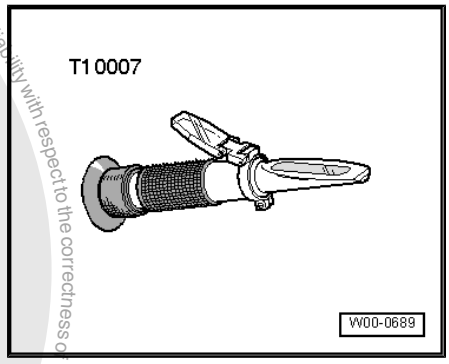

Read precise value for the following tests at bright/dark boundary. Using a pipette, place a drop of water on the glass to improve the readability of the bright/dark boundary. The bright/dark boundary can be clearly recognised on the “WATERLINE”.

– Check concentration of anti-freeze additive using refractometer -T10007- (refer to operating instructions).

The scale -1- of the refractometer is calibrated for Windscreen Clear -G 052 164- .

The scale -2- is designed for commercially available windscreen cleanser as well as a mixture of commercially available windscreen cleanser and Windscreen Clear -G 052 164- .

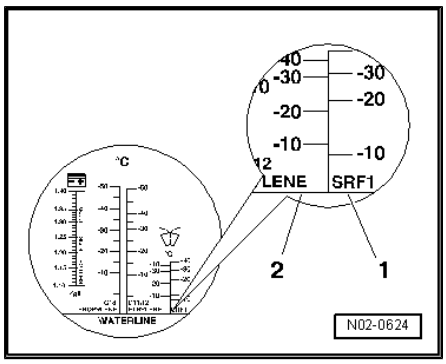

Mixture ratio:

Frost protection to	Windscreen Clear G 052 164	Water
In summer	1 part	4 parts
-16 °C	1 part	2 parts
-35 °C	1 part	1 part
-40 °C	2 parts	1 part

Replenishing fluid:

The fluid reservoir of the window washer system must be filled completely.

Downloaded from www.Manualslib.com manuals search engine

Starting immediately, use only Windscreen Clear -G 052 164- all-year-round when replenishing the window wash/wipe system.

Note

- *Windscreen Clear -G 052 164- protects the spray jets, fluid reservoir and connecting hoses from freezing.*
- *For all vehicles having fan-type spray jets, the reservoir must be filled with Windscreen Clear -G 052 164- , as this fluid has a low viscosity at temperatures below freezing. Otherwise the complicated spray jet system can become blocked by the crystallised washer fluid, which affects the spray pattern of the spray jet. Windscreen Clear -G 052 164- ensures that the fan type spray jets remain fully functional also at low temperatures.*
- *Replenish Windscreen Clear -G 052 164- also in the warmer periods of the year. The powerful cleanser removes wax and oil residue from the glass.*
- *Frost protection must be guaranteed to approx. -25 °C (approx. -35 °C in countries with an arctic climate) in the washer system.*

4.43.2 Window wash/wipe system: Check spray jet settings and adjust if necessary

Note

- *If the spray field is uneven due to soiling in the spray jet, remove spray jet "Electrical system" ⇒ Electrical system; Rep. Gr. 92 ; Removing and installing spray jets for windscreen washer system "Removing and installing spray jets for windscreen washer system" and rinse with water opposite to direction of spray.*
- *Then it is permitted to blow out opposite to direction of spray with compressed air.*

Caution

- ***Never use items to clean the spray jets!***
- ***Never use a needle or a similar object to adjust the spray jets, otherwise the water passages in the spray jet will be damaged!***

Spray jets for windscreen washer system: ⇒ page 133 .

Spray jets for rear window washer system: ⇒ page 133

Special tools and workshop equipment required

Downloaded from www.Manualslib.com manuals search engine

♦ Setting tool -T10127- equipped with needle 3125/5 A

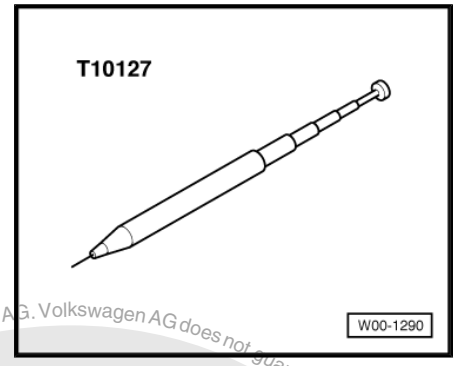

Spray jets for windscreen washer system:

The washer jets are preset. However, small height differences can be compensated for.

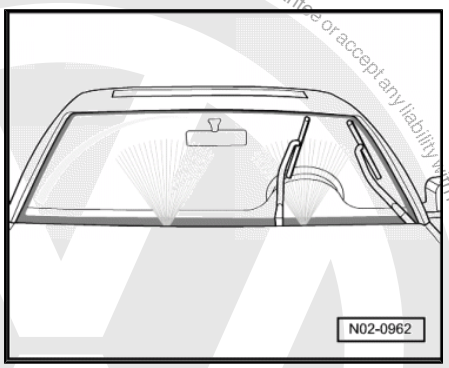

– If both spray fields are not at same height, adjust spray direction upwards or downwards as follows:

– Adjust spray direction at adjuster -arrow- using a screwdriver.

♦ “Clockwise” lower.

♦ “Anti-clockwise” higher.

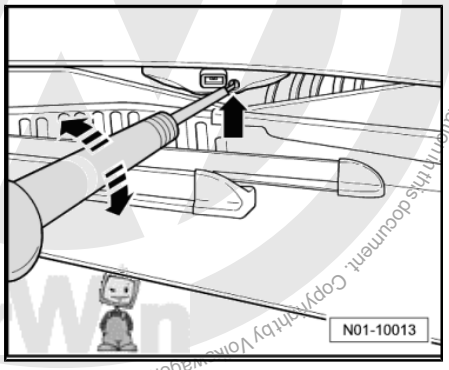

Spray jets for rear window washer system:

Note

Adjusting the spray jet is only possible vertically, i.e. in direction of rear window or in opposite direction. A lateral adjustment of spray jet in direction of wiper arm must not be performed. The spray jet is firmly adjusted in this direction at the factory.

– Adjust spray jet with adjusting tool -T10127 - so that the water jet sprays onto the upper third of rear window.

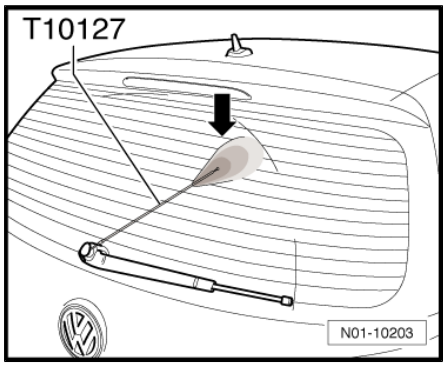

Protected by copyright. Copying for private or commercial purposes, in part or in whole, is not permitted unless authorised by Volkswagen AG. Volkswagen AG does not guarantee or accept any liability with respect to the correctness of information in this document. Copyright by Volkswagen AG.

Downloaded from www.Manualslib.com manuals search engine

4.43.3 Headlight washer system: Check spray jet settings, adjust if necessary, Golf 2004 ▸

Headlight washer system: Check spray jet settings, adjust if necessary, Golf Plus 2005 ▸ ⇒ page 135

Note

- *If the spray field is uneven due to soiling in the spray jet, remove spray jet "Electrical system" ⇒ Electrical system; Rep. Gr. 92 ; Removing and installing spray jets for windscreen washer system "Removing and installing spray jet retainer" and rinse with water opposite to direction of spray.*
- *Then it is permitted to blow out opposite to direction of spray with compressed air.*

Caution

- ***Never use items to clean the spray jets!***
- ***Never use a needle or a similar object to adjust the spray jets, otherwise the water passages in the spray jet will be damaged!***

Special tools and workshop equipment required

- Adjusting tool -T10167-

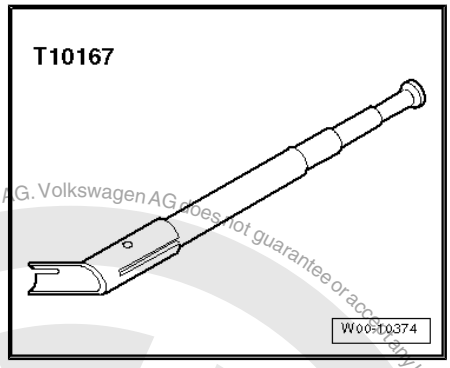

The jet adjustment dimensions are for the left-hand headlight (right-hand headlight mirror image)

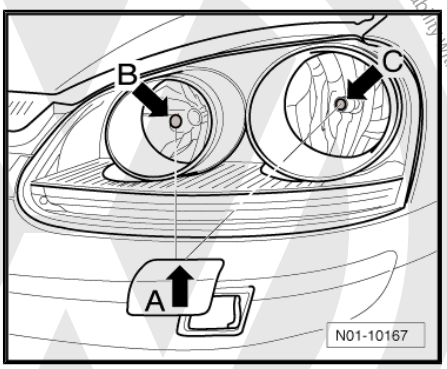

Checking jet setting

– Switch on dipped headlight.

– Operate windscreen washer system.

The headlights are washed if the windscreen wiper lever is hold in "Wipe position" for at least 1.5 seconds.

The spray jet must spray to centre of headlights, see -B- and -C-.

Adjusting jets

– Switch on dipped headlight.

– Operate windscreen washer system.

The headlights are washed if the windscreen wiper lever is hold in "Wipe position" for at least 1.5 seconds.

Protected by copyright. Copying for private or commercial purposes, in part or in whole, is not permitted unless authorised by Volkswagen AG. Volkswagen AG does not guarantee or accept any liability with respect to the correctness of information in this document. Copyright by Volkswagen AG.

Downloaded from www.Manualslib.com manuals search engine

The spray jets -arrows- are extended.

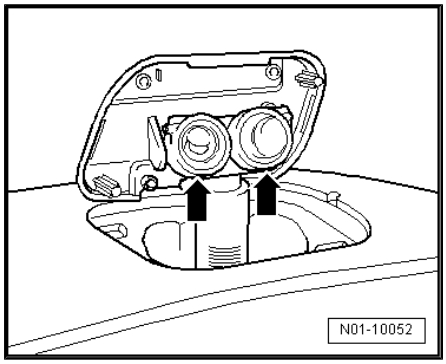

– Carry out the following procedure:
– Align spray direction of respective jet to upper edge of headlight -item B- and -item C- using adjusting tool -T10167- .

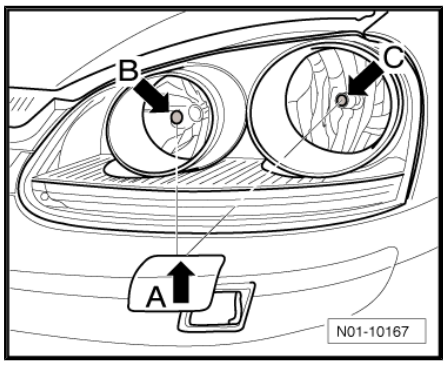

4.43.4 Headlight washer system: Check spray jet settings, adjust if necessary, Golf Plus 2005 ▸

Note

- *If the spray field is uneven due to soiling in the spray jet, remove spray jet "Electrical system" ⇒ Electrical system; Rep. Gr. 92 ; Removing and installing spray jet retainer "Removing and installing headlight washer system/spray jet retainer" and rinse with water opposite to direction of spray.*
- *Then it is permitted to blow out opposite to direction of spray with compressed air.*

Caution

- ***Never use items to clean the spray jets!***
- ***Never use a needle or a similar object to adjust the spray jets, otherwise the water passages in the spray jet will be damaged!***

Special tools and workshop equipment required

Protected by copyright. Copyright for private or commercial purposes, in part or in whole, is not permitted unless authorised by Volkswagen AG. Volkswagen AG does not guarantee or assume any liability with respect to the correctness of information in this document. Copyright by Volkswagen AG.

Downloaded from www.Manualslib.com manuals search engine

Protected by copyright. Copying for private or commercial purposes, in part or in whole, is not permitted unless authorised by Volkswagen AG. Volkswagen AG does not guarantee or accept any liability with respect to the correctness of information in this document. Copyright by Volkswagen AG.

♦ Adjusting tool -T10167-

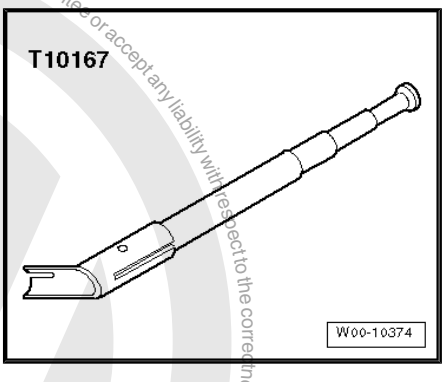

The jet adjustment dimensions are for the left-hand headlight (right-hand headlight mirror image)

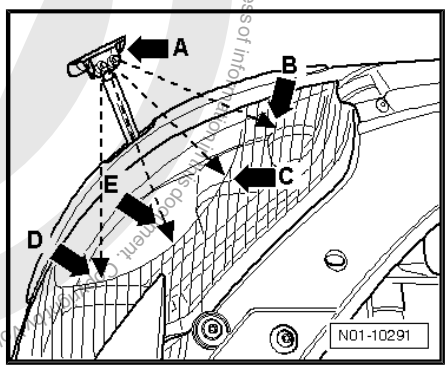

Checking jet setting

– Switch on dipped headlight.

– Operate windscreen washer system.

The headlights are washed if the windscreen wiper lever is hold in “Wipe position” for at least 1.5 seconds.

The spray jet of the headlight washer jets -A- should spray to centre of headlights, see -B-, -C-, -D- and -E-.

Adjusting jets

– Switch on dipped headlight.

– Operate windscreen washer system.

The headlights are washed if the windscreen wiper lever is hold in “Wipe position” for at least 1.5 seconds.

The spray jets -arrows- are extended.

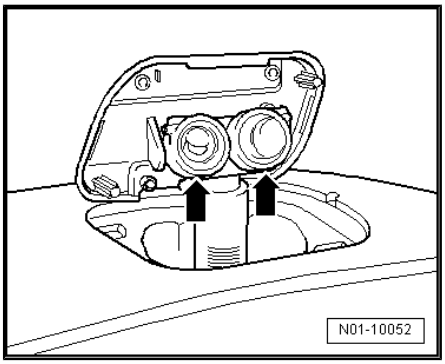

– Carry out the following procedure:

– Align spray direction of respective jet to upper edge of headlight, see -B-, -C- -D- and -E- using adjusting tool -T10167- .

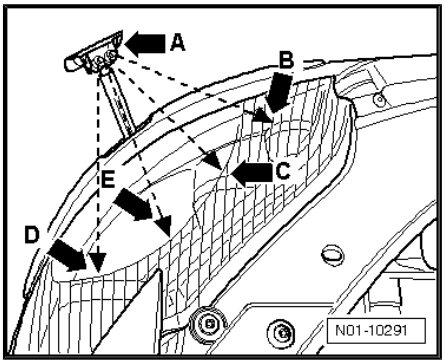

Downloaded from www.Manualslib.com manuals search engine

4.44 Wiper blade protection: Remove

Currently there are three versions to separate the wiper blade protection from the wiper blade or to exchange a transport wiper arm.

Version 1

On this wiper arm the blade protector is secured on the blade with two securing clips -arrows-.

Perform the following procedure:

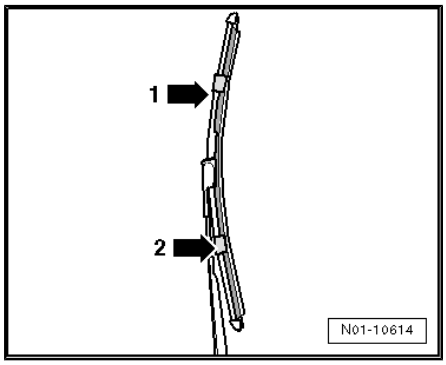

– Set wipers in service position. This can be done by switching the ignition on and off once with bonnet closed. Then operate wiper lever and the wipers will stop in service position.

– Take the right-hand wiper from windscreen and lift.

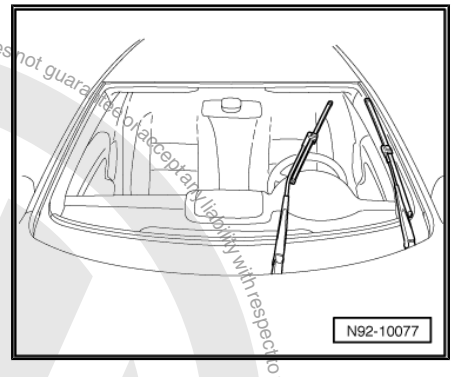

> **Caution**
>
> ***To prevent damage, ensure that the wiper is only touched at the wiper joint and do not pull on the wiper blade.***

– Now remove upper securing clip upwards and lower securing clip downwards -arrows-.

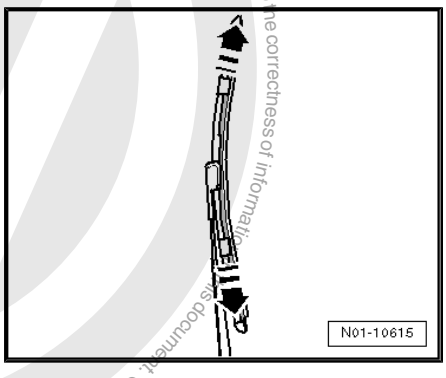

– Pull blade protector off wiper blade from bottom to top.

– Carefully place wiper arm back onto windscreen.

Perform the same procedure for the left-hand wiper.

– Switch ignition on and briefly operate the wiper lever to move the wipers back to park position. Switch ignition off again.

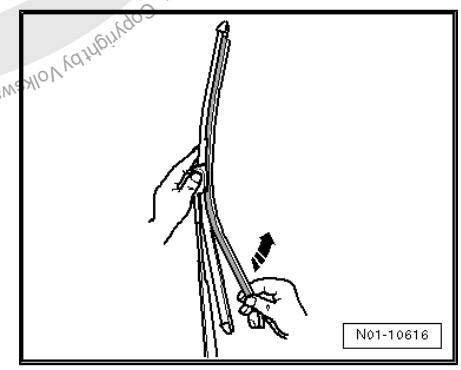

Version 2

Protected by copyright. Copying for private or commercial purposes, in part or in whole, is not permitted unless authorised by Volkswagen AG. Volkswagen AG does not guarantee or accept any liability with respect to the correctness of information in this document. Copyright by Volkswagen AG.

Downloaded from www.Manualslib.com manuals search engine

This transport wiper arm is fitted without wind deflector.

Perform the following procedure:

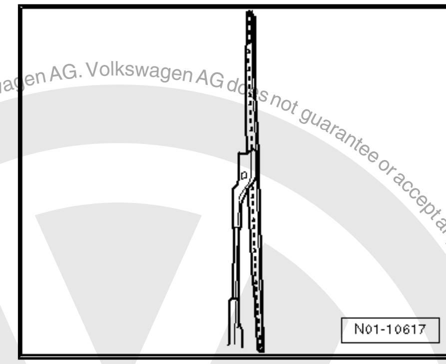

– Set wipers in service position. This can be done by switching the ignition on and off once with bonnet closed. Then operate wiper lever and the wipers will stop in service position.

– Take the right-hand wiper from windscreen and lift.

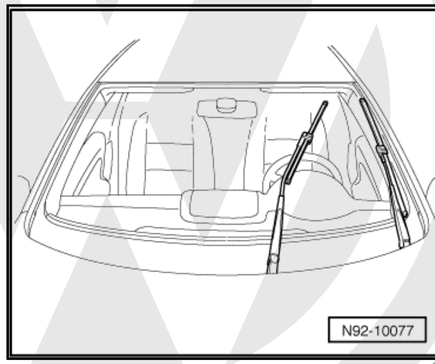

> ⚠ **Caution**
>
> *To prevent damage, ensure that the wiper is only touched at the wiper joint and do not pull on the wiper blade.*

– Depending on version, turn the wiper arm with lip upwards and pull off, or release wiper arm at joint -3- by pushing locking device -1- into mounting -2- and pull wiper arm out.

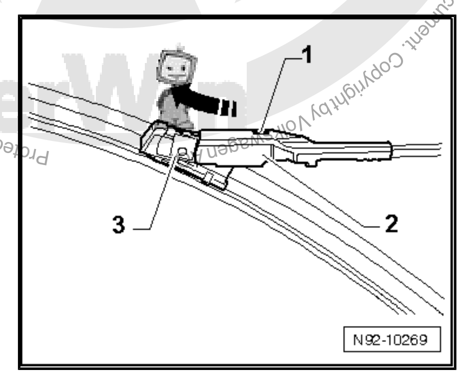

– Slide the new wiper arm into mounting and ensure that it audibly engages.

Perform the same procedure for the left-hand wiper.

– Carefully place wiper arm back onto windscreen.

– Switch ignition on and briefly operate the wiper lever to move the wipers back to park position. Switch ignition off again.

Version 3

On this wiper arm the blade protector -arrow- is slid on the wiper blade.

Perform the following procedure:

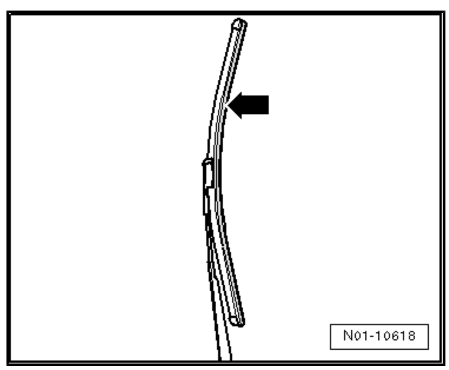

Protected by copyright. Copying for private or commercial purposes, in part or in whole, is not permitted unless authorised by Volkswagen AG. Volkswagen AG does not guarantee or accept any liability with respect to the correctness of information in this document. Copyright by Volkswagen AG.

Downloaded from www.Manualslib.com manuals search engine

Protected by copyright. Copying for private or commercial purposes, in part or in whole, is not permitted unless authorised by Volkswagen AG. Volkswagen AG does not guarantee or accept any liability with respect to the correctness of information in this document. Copyright by Volkswagen AG.

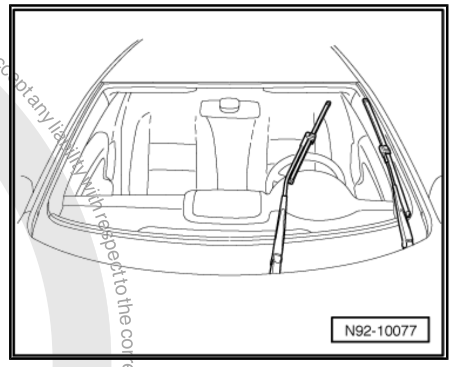

– Set wipers in service position. This can be done by switching the ignition on and off once with bonnet closed. Then operate wiper lever and the wipers will stop in service position.

– Take the right-hand wiper from windscreen and lift.

> ⚠ **Caution**
>
> *To prevent damage, ensure that the wiper is only touched at the wiper joint and do not pull on the wiper blade.*

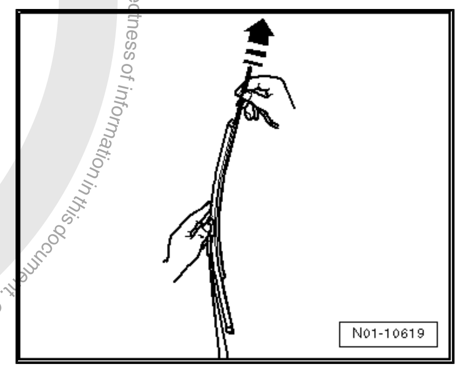

– Pull blade protector off wiper blade upwards.

Perform the same procedure for the left-hand wiper.

– Carefully place wiper arm back onto windscreen.

– Switch ignition on and briefly operate the wiper lever to move the wipers back to park position. Switch ignition off again.

4.45 Wiper blades: Check park position

Windscreen wiper blades: Check park position, Golf 2004 ▸: ⇒ page 139 .

Windscreen wiper blades: Check park position, Golf Plus 2005 ▸: ⇒ page 139 .

4.45.1 Windscreen wiper blades: Check park position, Golf 2004 ▸

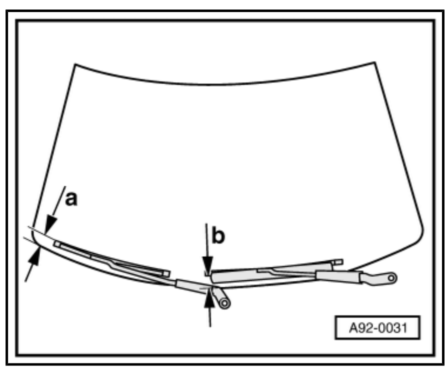

– Check that the distance of the wiper blade ends to plenum chamber cover on lower edge of windscreen are as follows:

- ♦ Dimension -a- = 0...10 mm
- ♦ Dimension -b- = 0...10 mm

> **Note**
>
> *For right-hand drive vehicles the placement is a mirror image!*

– Adjust wiper arms if necessary:

Adjusting wiper blades “Electrical system” ⇒ Electrical system; Rep. Gr. 92 ; Adjusting wiper blade park position “Windscreen wiper system/Adjusting wiper blade park position”.

4.45.2 Windscreen wiper blades: Check park position, Golf Plus 2005 ▸

Wiper blades: Check park position, adjust if necessary “Electrical system” ⇒ Electrical system; Rep. Gr. 92 ; Adjusting wiper blade park position “Windscreen wiper system/Adjusting wiper blade park position”

Downloaded from www.Manualslib.com manuals search engine

4.45.3 Rear window wiper blades: Check park position

– Switch rear window wiper on and off and let it move into park position.

– Check that the distance of wiper blade ends to the lower edge of window is as follows.

♦ Dimension -a- = 15 + 5 mm

– Adjust wiper arm if necessary: “Electrical system” ⇒ Electrical system; Rep. Gr. 92 ; Adjusting rear window wiper park position “Rear window wiper system/Adjusting rear window wiper park position”.

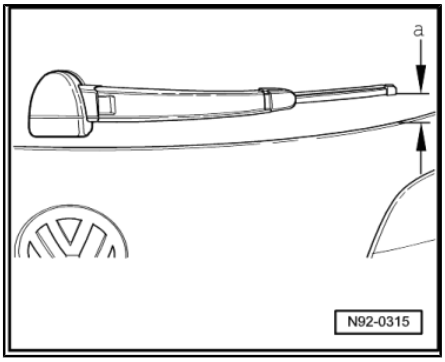

4.46 Track rod ends: Check play, security and boots

Carry out the following procedure:

– With vehicle raised (wheels hanging free), check play by moving track rods and wheels.

Play: Zero play

– Check mountings.

– Check that boots -arrow- are not damaged and are seated correctly.

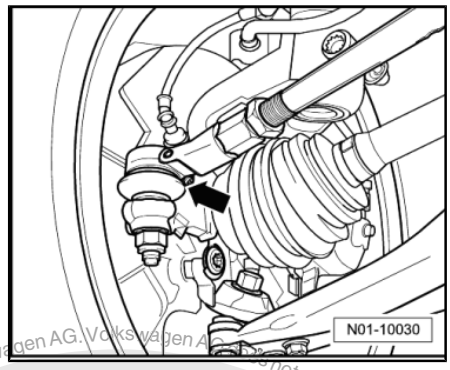

4.47 Auxiliary heater: Set weekday in menu of combi-instrument

As the weekday in the menu for the auxiliary heater is not part of the time and date setting for the combi-instrument, it must be set separately.

Setting weekday using buttons on multifunction steering wheel

– Press button -1- until the menu for auxiliary heater appears.

– Press button -4- until “Weekday” is shown and select using button -3-.

– Now set weekday using buttons -4- and -2- and confirm with button -3-.

– Exit menu using button -1-.

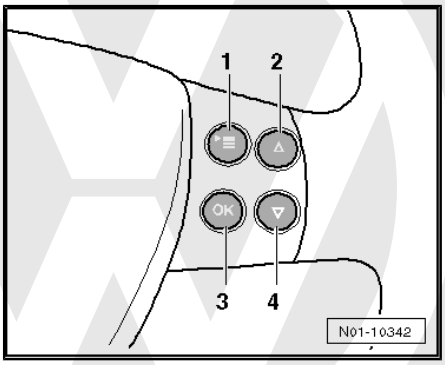

Protected by copyright. Copying for private or commercial purposes, in part or in whole, is not permitted unless authorised by Volkswagen AG. Volkswagen AG does not guarantee or accept any liability with respect to the correctness of information in this document. Copyright by Volkswagen AG.

Downloaded from www.Manualslib.com manuals search engine

Setting weekday using buttons on windscreen wiper lever

– Setting in the menu is performed respectively with buttons on the steering wheel.

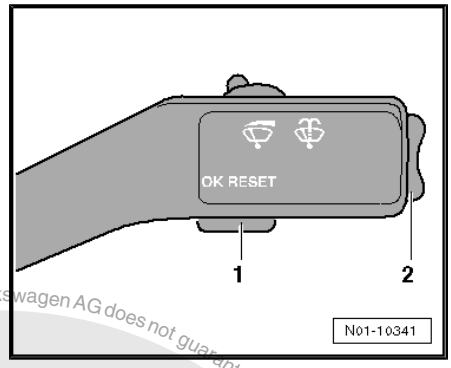

4.48 Door arrester: Grease

Carry out the following procedure:

– Grease door arrester at points shown -arrows-.

Use grease -G 000 150- .

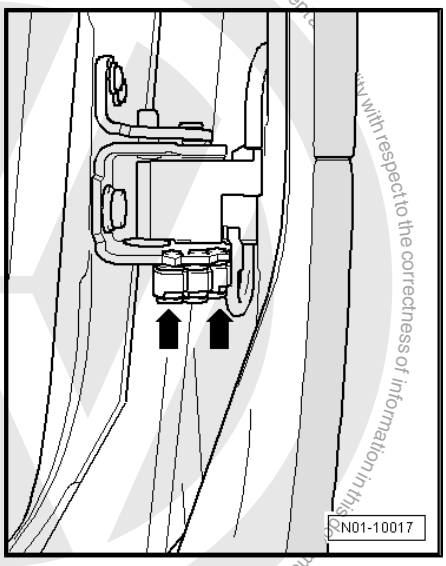

4.49 Transportation mode: Switch off

– Connect vehicle diagnostic tester ⇒ page 32 .

– Switch on ignition.

Indicated on display:

Selecting operating mode

– Press button for “Vehicle self-diagnosis” on display.

If the display is not as shown in the procedure: see operating instructions for vehicle diagnostic tester .

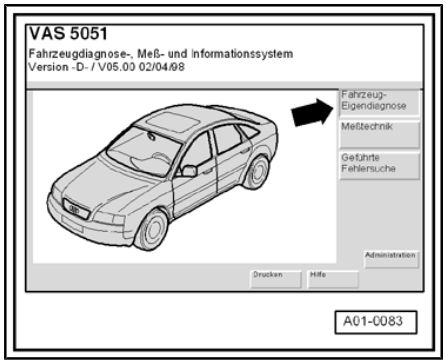

Protected by copyright. Copyright by Volkswagen AG. Copying for private or commercial purposes, in part or in whole, is not permitted unless authorised by Volkswagen AG. Volkswagen AG does not guarantee or accept any liability with respect to the correctness of information in this document.

Downloaded from www.Manualslib.com manuals search engine

Indicated on display:

– Press the button on display for “Collection services”.

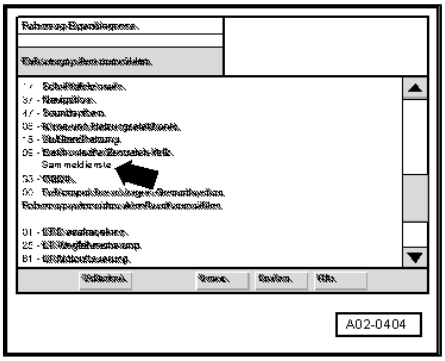

Indicated on display:

– Press the button on display for “Switch off transportation mode”.

Ending output

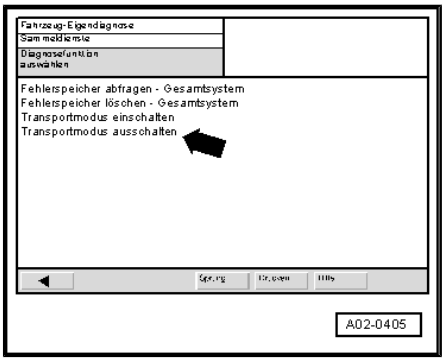

Indicated on display:

– Press “GoTo” button on display -arrow-.

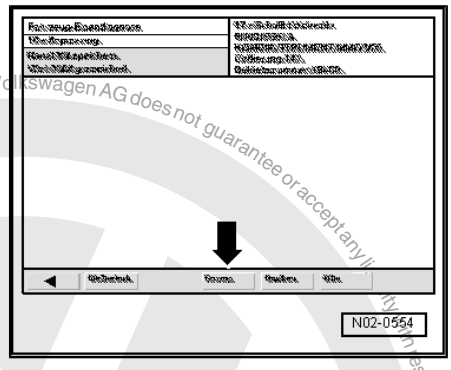

Indicated on display:

– Press the “End” button on display -arrow-.

– Press “End” button in End menu.

– Switch off ignition.

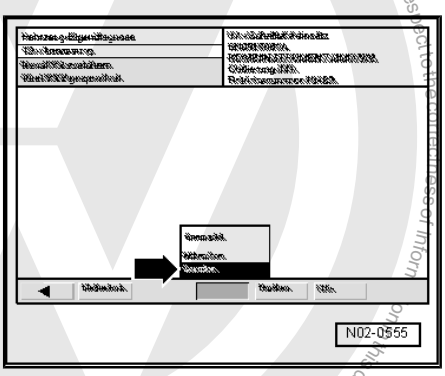

Note

The vehicle diagnostic tester must probably remain connected for further tests.

Protected by copyright. Copying for private or commercial purposes, in part or in whole, is not permitted unless authorised by Volkswagen AG. Volkswagen AG does not guarantee or accept any liability with respect to the correctness of information in this document. Copyright by Volkswagen AG.

Downloaded from www.Manualslib.com manuals search engine

4.50 Transportation devices: Remove blocking pieces from front axle springs

Blocking pieces are fitted to front axle springs of vehicles with sports running gear. These vehicles are identified by a warning tag on the mirror -arrow-.

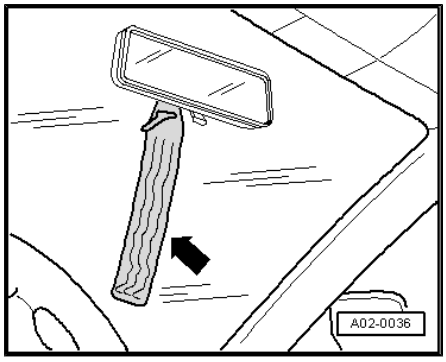

Note

The blocking pieces prevent the springs compressing and possible damage to the vehicle when being driven onto a vehicle transporter or railway wagon.

WARNING

The blocking pieces must be removed without reservation before delivering the vehicle. A "Warning" notice, attached to the interior mirror, specifically reminds of this.

Carry out the following procedure:

Note

- *There is no requirement to remove the wheels.*
- *Ensure that the surface of the springs is not damaged.*

– Relieve weight on springs by raising vehicle with a hoist.

– Push blocking piece -arrow- off coil spring.

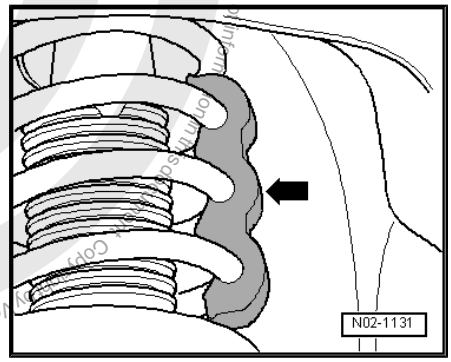

4.51 Underbody: Visual check for damage to underbody sealant, underbody panels, routing of lines, plugs etc.

During visual check, also check floor pan, wheel housings and sills.

Always ensure that all lines are secured in their mountings, all plugs are available and that there is no visible damage on the underbody.

Note

Faults found must always be rectified (repair measure). This inhibits corrosion and rusting through.

Protected by copyright. Copying for private or commercial purposes, in part or on whole, is not permitted unless authorised by Volkswagen AG. Volkswagen AG does not guarantee or accept any liability with respect to the correctness of information.
Copyright by Volkswagen AG.

Downloaded from www.Manualslib.com manuals search engine

4.52 Clock and date: Set to correct time

Set clock with buttons below rev. counter

The setting buttons are located on the left below the rev. counter.

– Press the left button -1- to set the hours. Press the button only briefly to advance the time one hour.

– Press the right button -2- to set the minutes. Press the button briefly to advance the time one minute.

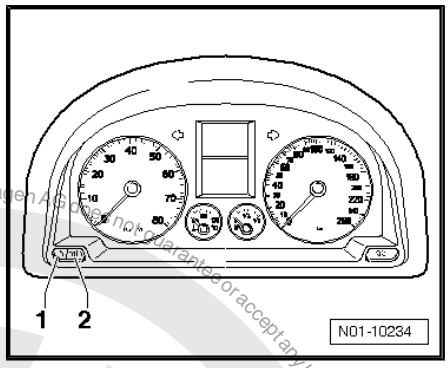

Set clock and date using buttons on windscreen wiper lever

– Switch on ignition.

– Press button -2- for 2 seconds to open the main menu.

– Press button -2- to select the menu “Settings” and confirm using button -1-.

– Press button -2- to call up the menu “Time” and confirm using button -1-.

– Now mark the menu option “Hours” by pressing button -1-, set correct hour using button -2- and confirm with button -1-.

– For the menu option “Minutes” it is the same procedure.

– The menu “Settings” can be closed via the menu option “back”.

– Now select “MFI” for actual display and confirm this using button -1-.

– Switch off ignition.

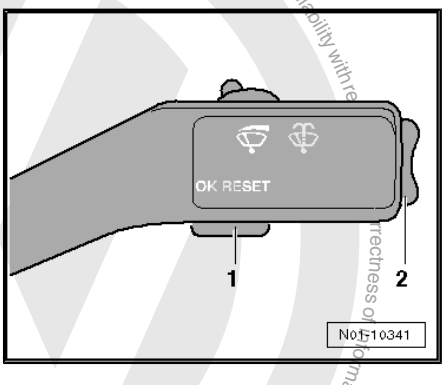

Setting clock and date using buttons on multifunction steering wheel

– Switch on ignition.

– Press button -1- until the menu “Settings” appears.

– Then select menu option “Time” with buttons -2- and -4-.

– Confirm the selection with button -3-.

– When “Hours” is marked, the marked menu option is found between the two horizontal lines, confirm with button -3- and set the correct hour with buttons -2- and -4-.

– Press button -3- again and set the minutes, which is the same procedure as for setting the hours.

– The menu can be closed with button -1-.

– Switch off ignition.

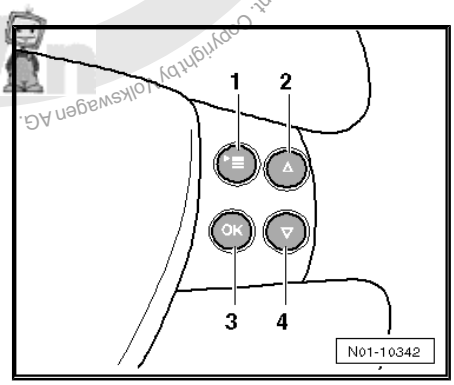

Protected by copyright. Copyright by Volkswagen AG. Volkswagen AG does not guarantee or accept any liability with respect to the correctness of information in this document. Copying for private or commercial purposes, in part or in whole, is not permitted unless authorised by Volkswagen AG.

Downloaded from www.Manualslib.com manuals search engine

4.53 Toothed belt and toothed belt tensioning roller: Renew (TDI unit injector)

Note

Generally it is not necessary to renew the toothed belt before the actual change interval is reached. Especially cracks on the belt side are not relevant for service life and cannot be covered by goodwill or warranty processing.

– Removing and installing toothed belt, “Power unit” ⇒ Power unit; Rep. Gr. 15 ; Removing, installing and tensioning toothed belt “Removing, installing and tensioning toothed belt”.

4.54 Camshaft drive toothed belt: Renew (only 2.0 l FSI and TFSI)

Note

Generally it is not necessary to renew the toothed belt before the actual change interval is reached. Especially cracks on the belt side are not relevant for service life and cannot be covered by goodwill or warranty processing.

– Removing and installing toothed belt, “Power unit” ⇒ Power unit; Rep. Gr. 15 ; Removing, installing and tensioning toothed belt “Removing, installing and tensioning toothed belt”.

4.55 Camshaft drive toothed belt: Check (4-cylinder petrol engines 1.4 l 55 kW and 1.6 l 75 kW)

4.55.1 Checking toothed belt condition

– Remove upper toothed belt guard.

– By turning crankshaft one full turn, check toothed belt condition for:

- -A- Cracks, cross-sectional breaks, cracks (coating)
- -B- Side contact
- -C- Fraying of cord strands
- -D- Cracks (in teeth base)
- Layer separation (toothed belt body, draw strands)
- Surface cracks (synthetic coating)
- Traces of oil and grease

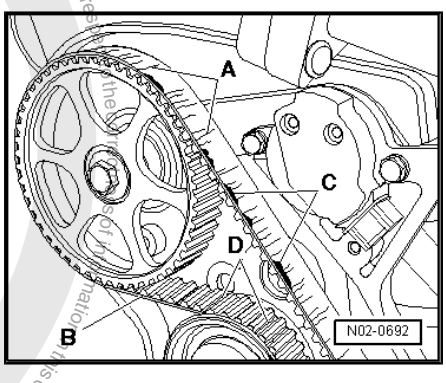

Note

If faults are found always renew toothed belt. This will avoid possible breakdowns or operating problems. The replacement of a toothed belt is a repair measure.

Downloaded from www.Manualslib.com manuals search engine

4.56 Spark plugs: Renew

Renewing spark plugs: 1.4 l injection engine ⇒ page 149 .

Renewing spark plugs: 1.4 l TSI engines ⇒ page 156 .

Renewing spark plugs: 1.6 l injection engine and Flex Fuel engine ⇒ page 154 .

Renewing spark plugs: 2.0 l FSI, TFSI and TSI ⇒ page 151 .

Renewing spark plugs, 2.5 l injection engines ⇒ page 153 .

Renewing spark plugs: 1.4 l and 1.6 l FSI engine ⇒ page 155 .

Renewing spark plugs: 3.2 l injection engine ⇒ page 148 .

Renewing spark plugs: 1.4 l TFSI engines ⇒ page 158 .

Special tools and workshop equipment required

- Spark plug socket and extension -3122 B-

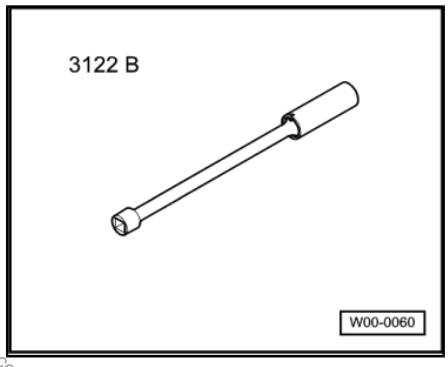

- Torque wrench -V.A.G 1331-

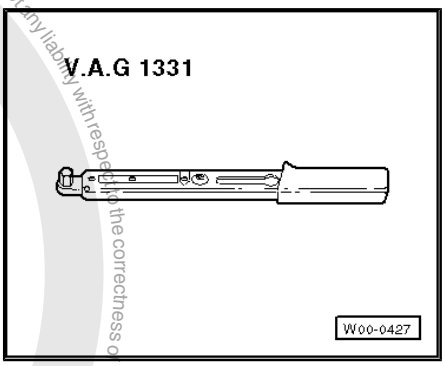

- Puller -T40039-

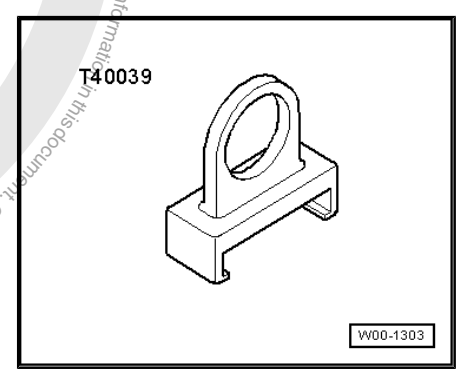

Protected by copyright. Copying for private or commercial purposes, in part or in whole, is not permitted unless authorised by Volkswagen AG. Volkswagen AG does not guarantee or accept any liability with respect to the correctness of information in this document. Copyright by Volkswagen AG.

Downloaded from www.Manualslib.com manuals search engine

- Puller -T10094 A-

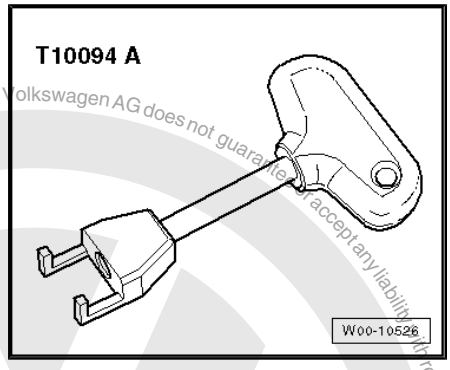

- Puller -T10095-

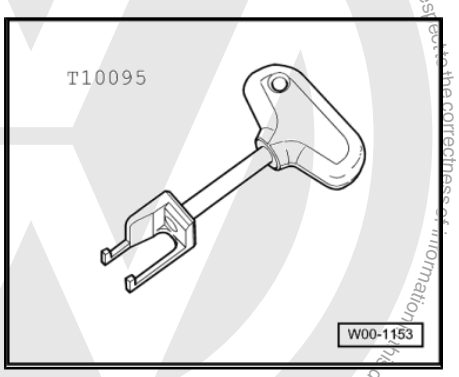

- Assembly tool -T10029-

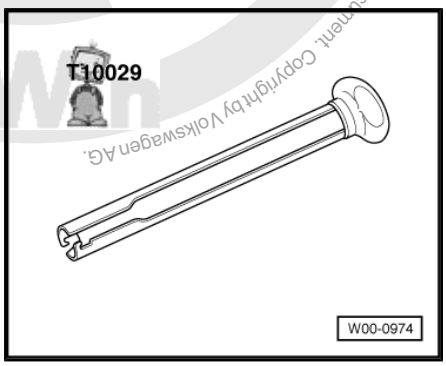

- Puller -T10112-

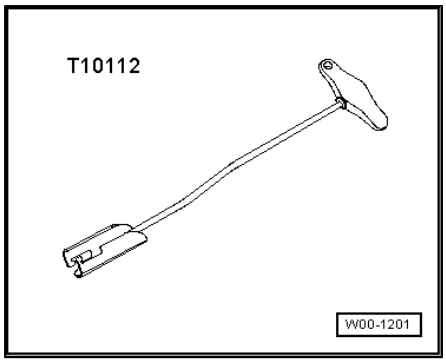

Protected by copyright. Copying for private or commercial purposes, in part or in whole, is not permitted unless authorised by Volkswagen AG. Volkswagen AG does not guarantee or accept any liability with respect to the correctness of information in this document. Copyright by Volkswagen AG.

Downloaded from www.Manualslib.com manuals search engine

Protected by copyright. Copying for private or commercial purposes, in part or in whole, is not permitted unless authorised by Volkswagen AG. Volkswagen AG does not guarantee or accept any liability with respect to the correctness of information in this document. Copyright by Volkswagen AG.

♦ Assembly tool -T10118-

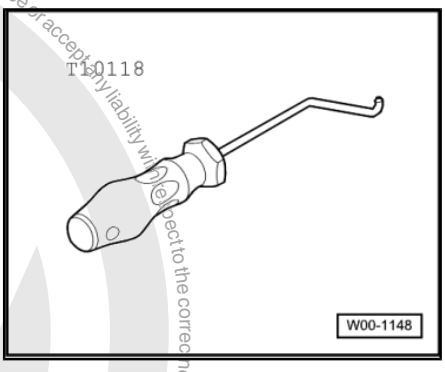

4.56.1 Renewing spark plugs: 3.2 l injection engine

Removing

– Pull off ignition coil connector with final output stages -arrows-.

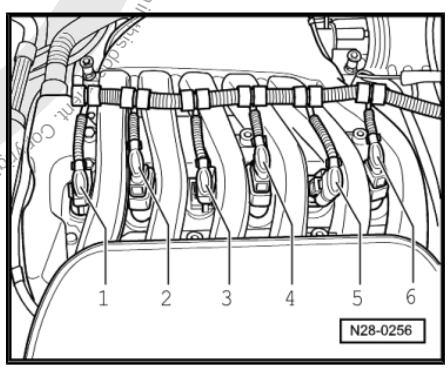

– Position assembly tool -T10118- at connector locking device -arrow- and carefully pull off connector.

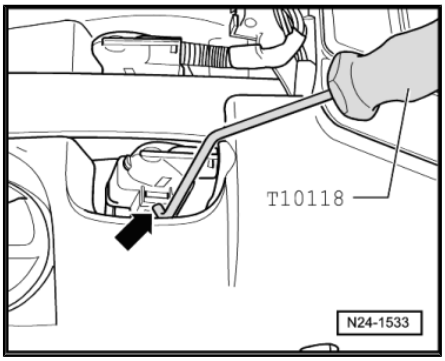

– Push puller -T10095/a- from the flat side of the connector in direction of arrow onto ignition coil with final output stage.

– Pull out ignition coil with output stage upwards vertically.

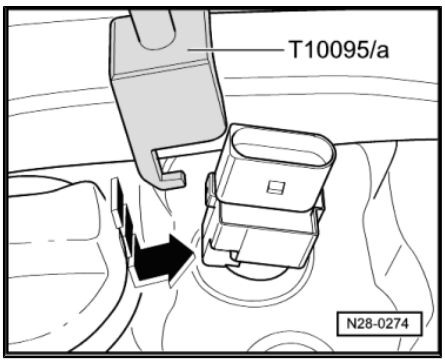

Downloaded from www.Manualslib.com manuals search engine

– Before removing ignition coils with output stage observe fitting position to the connectors -arrows-.

The flat side of the connector must align with the flat side of ignition coil with final output stage.

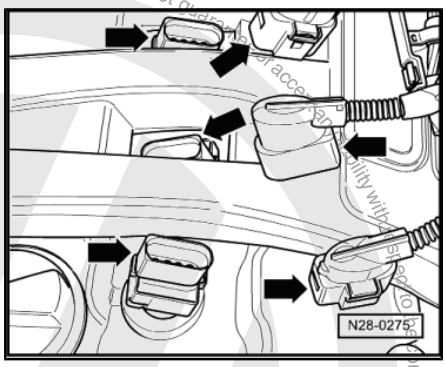

– Unscrew spark plugs using spark plug socket and extension -VAS 3122B- .

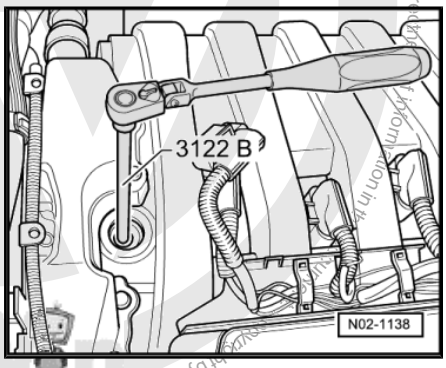

Note

- *Spark plug designation and specified torque: "Power unit" ⇒ Power unit; Rep. Gr. 28 ; Test data, spark plugs "Test data, spark plugs".*
- *Observe disposal regulations!*

Installing

– Screw in new spark plugs using spark plug socket and extension -VAS 3122B- .

– Carefully set ignition coils with final output stage onto spark plugs by hand so that the flat sides of connectors align -arrows-.

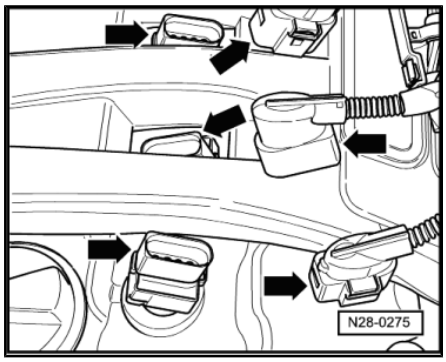

– Connect ignition coil connectors 1...6 with final output stage.

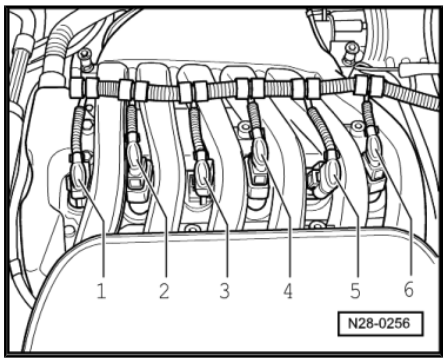

4.56.2 Renewing spark plugs: 1.4 l injection engine

Removing

– Remove engine cover ⇒ page 89 .

Downloaded from www.Manualslib.com manuals search engine

The spark plugs are located under ignition coils with output stages -arrow-.

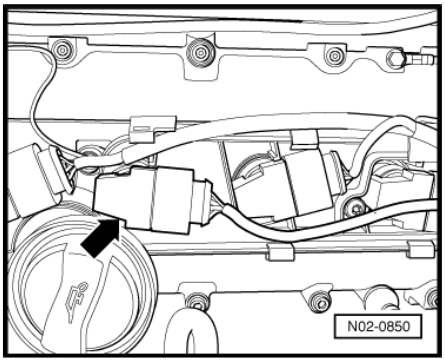

Note

Note installation position of ignition coils with output stages.

– Pull ignition coils with output stages off spark plugs using the puller -T10094 A- .

– Press connector in direction of ignition coils with output stage, press onto catch by hand and pull off.

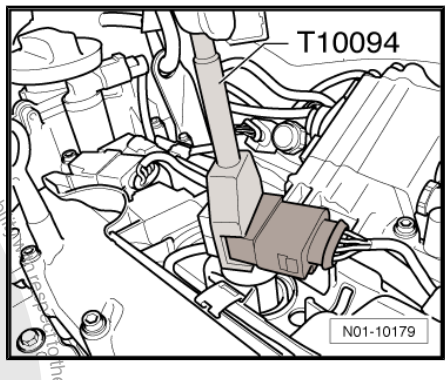

– Unscrew spark plugs using spark plug socket and extension -3122 B- .

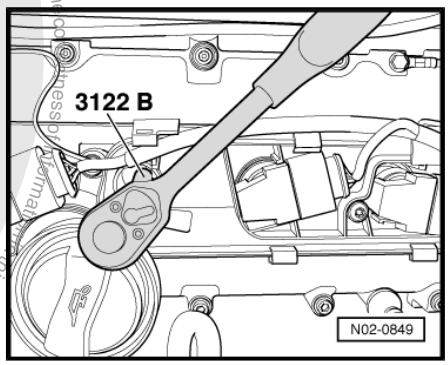

Note

- *Spark plug designation and specified torque: "Power unit" ⇒ Power unit; Rep. Gr. 28 ; Test data, spark plugs "Test data, spark plugs".*
- *Observe disposal regulations!*

Installing

– Screw in new spark plugs using spark plug socket and extension -3122 B- .

– Connect connector to ignition coils with output stage and guide ignition coils with output stage into cylinder head.

– Align ignition coils with output stages in respective recesses of cylinder head cover.

– Connect ignition coils with output stage onto spark plugs by hand. They must be felt to engage.

– Install engine cover.

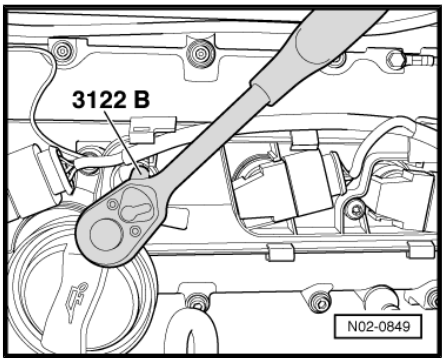

Downloaded from www.Manualslib.com manuals search engine

4.56.3 Renewing spark plugs: 2.0 l FSI, TFSI and TSI

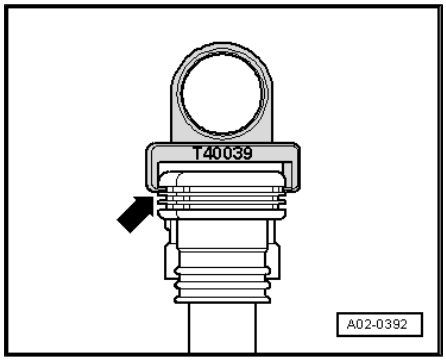

Removing:

Carry out the following procedure:

– Remove engine covers ⇒ page 89 .

Note

- *To pull off spark plugs, fit puller -T40039- on top, thick rib -arrow- of ignition coils with output stages.*
- *If the lower ribs are used, they could be damaged.*

The spark plugs are located below the ignition coils with output stages -2-.

– Remove the two bolts -1-.

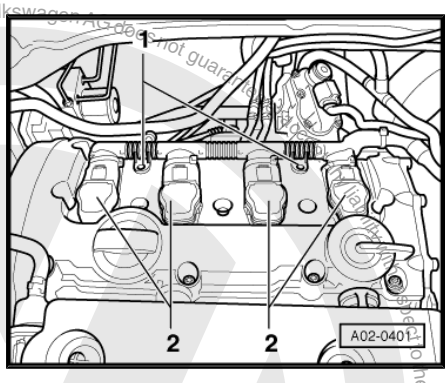

Note

Note installation position of ignition coils with output stages.

– Pull all ignition coils out of cylinder head approx. 30 mm in direction of arrow using puller -T40039- .

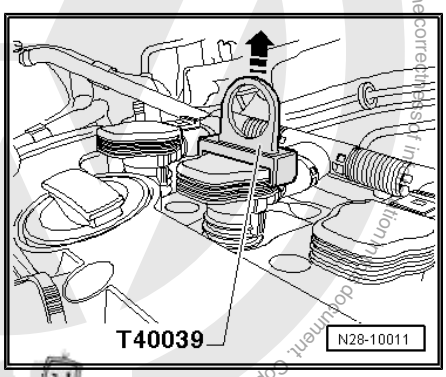

– Press connectors in direction of ignition coils with output stages, press onto catch by hand and pull connectors -arrows- off.

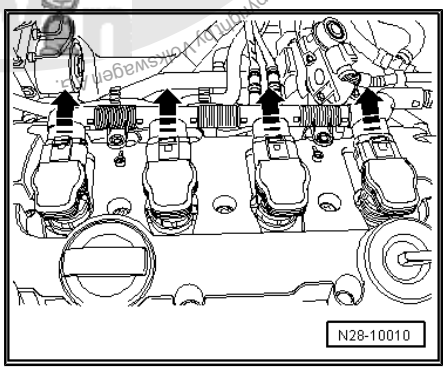

Protected by copyright. Copying for private or commercial purposes, in part or in whole, is not permitted unless authorised by Volkswagen AG. Volkswagen AG does not guarantee or accept any liability with respect to the correctness and completeness of this document.

Downloaded from www.Manualslib.com manuals search engine

– Unscrew spark plugs using spark plug socket and extension -3122 B- .

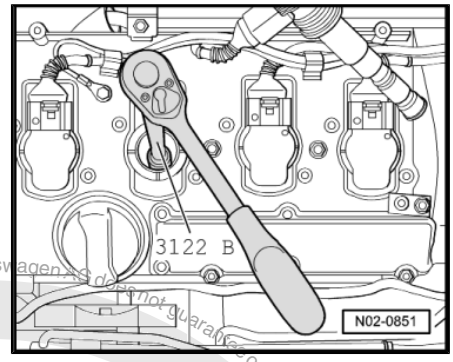

Note

- *Spark plug designation and specified torque: "Power unit" ⇒ Power unit; Rep. Gr. 28 ; Test data, spark plugs "Test data, spark plugs".*
- *Observe disposal regulations!*

Installing

– Screw in new spark plugs using spark plug socket and extension -3122 B- .

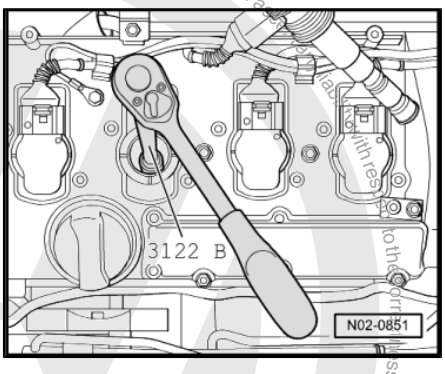

– Insert ignition coils with output stages into cylinder head.
– Align ignition coils with output stages in respective recesses of cylinder head cover.
– Fit all connectors onto ignition coils -arrows-.

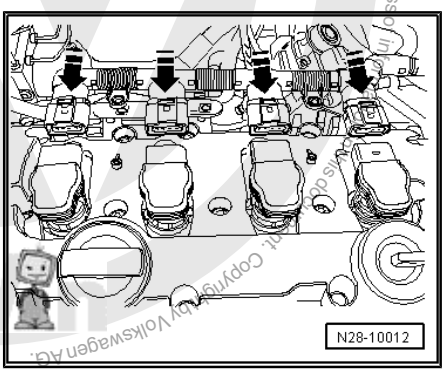

– Press ignition coils with output stages on spark plugs until stop by hand. They must be felt to engage.
– Secure cable guides with bolts -1-.
– Install engine cover.

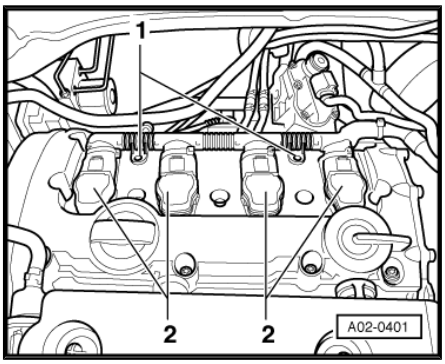

Protected by copyright. Copying for private or commercial purposes, in part or in whole, is not permitted unless authorised by Volkswagen AG. Volkswagen AG does not guarantee or accept any liability with respect to the correctness of information. Copyright by Volkswagen AG.

Downloaded from www.Manualslib.com manuals search engine

4.56.4 Renewing spark plugs, 2.5 l petrol injection engines

Removing:

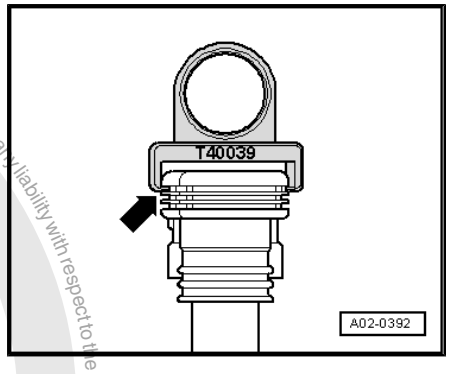

Note

- *To pull off spark plugs, fit puller -T40039- on top, thick rib -arrow- of ignition coils with output stages.*
- *If the lower ribs are used, they could be damaged.*

– Remove engine cover ⇒ page 89 .

The spark plugs are located below the ignition coils with output stages.

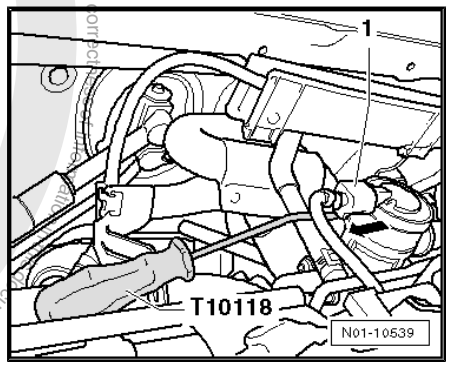

– Remove connector -1- in direction of arrow, using assembly tool -T10118- .

Note

It is necessary to remove the connector so that the ignition coils with output stages, cables connected and the cable guide can be laid to side.

– Remove all ignition coils with output stages -1- upwards using puller -T40039- .

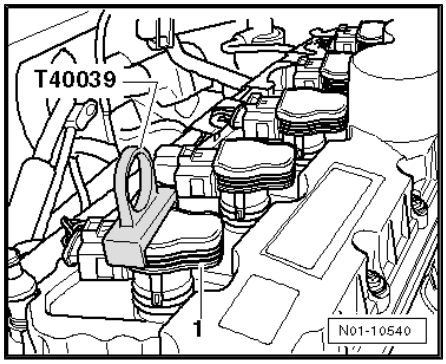

Note

- *When pulling out the ignition coils with output stages, the cables or the ignition coil connectors can remain connected.*
- *Note installation position of ignition coils with output stages.*

– Carefully place ignition coils with output stages and cables connected to side.

> **Caution**
>
> ***Ensure that the cables are not kinked or damaged.***

Protected by copyright. Copyright by Volkswagen AG. Volkswagen AG does not guarantee or accept any liability with respect to the correctness and completeness of this document. Copying for commercial purposes, in part or in whole, is not permitted unless authorised by Volkswagen AG.

Downloaded from www.Manualslib.com manuals search engine

– Unscrew spark plugs using spark plug socket and extension -3122 B- .

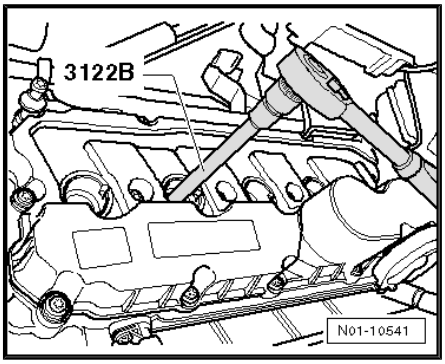

Installing

– Screw in new spark plugs using spark plug wrench -3122 B- and tighten to 20 Nm.

– Insert ignition coils with output stages in cylinder head and align ignition coils in respective recesses of cylinder head cover.

– Push ignition coils with output stages onto spark plugs until stop, they must be felt to engage.

– Connect connector onto exhaust recirculation valve until it noticeably engages.

Note

Ensure that the cable guide for ignition coils with output stages is routed correctly.

– Install engine cover ⇒ page 89 .

4.56.5 Renewing spark plugs: 1.6 l injection engine and Flex Fuel engine

Carry out the following procedure:

– Remove engine cover, if fitted ⇒ page 89 .

Removing:

– Pull off injector connectors of first and fourth cylinder.

– Pull off spark plug connector with Puller -T10112- .

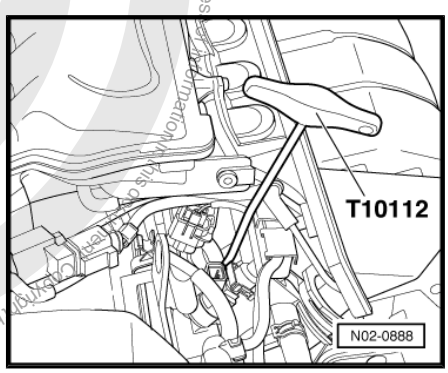

– Remove spark plug with spark plug socket and extension -3122 B- .

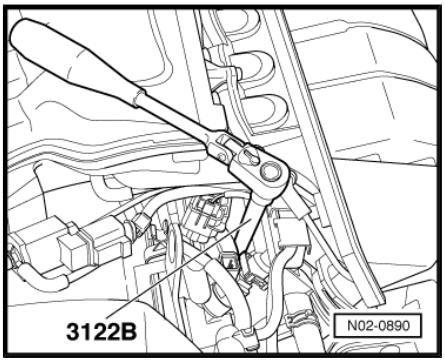

Note

- *Spark plug designation and specified torque: "Power unit" ⇒ Power unit; Rep. Gr. 28 ; Test data, spark plugs "Test data, spark plugs".*
- *Observe disposal regulations!*

Installing:

Protected by copyright. Copying for private or commercial purposes, in part or in whole, is not permitted unless authorised by Volkswagen AG. Volkswagen AG does not guarantee or accept any liability with respect to the correctness of information in this document. Copyright by Volkswagen AG.

Downloaded from www.Manualslib.com manuals search engine

– Screw in new spark plugs using spark plug socket and extension -3122 B- .

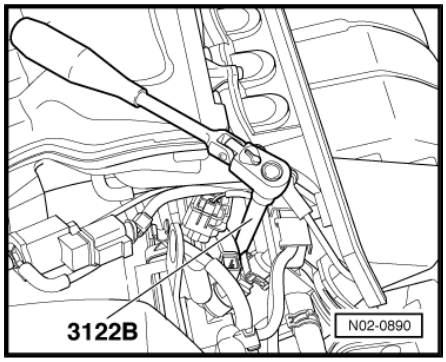

– Fit spark plug connectors using puller -T10112- .
– Fit connectors of injectors.
– Check if connectors of injectors, ignition cables and spark plug connectors are seated securely.
– Install engine cover again.

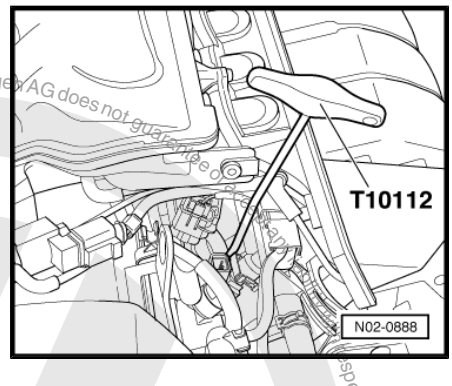

4.56.6 Renewing spark plugs: 1.4 and 1.6 l petrol direct injection engines

Carry out the following procedure:

– Remove engine cover ⇒ page 89 .
– Place Puller -T10094 A- on ignition coil with output stage -arrow-.
– Slightly pull out ignition coil with output stage.
– Fit assembly tool -T10118- as illustrated.
– Release connection locking device carefully and pull off connector.
– Pull out ignition coil with output stage.

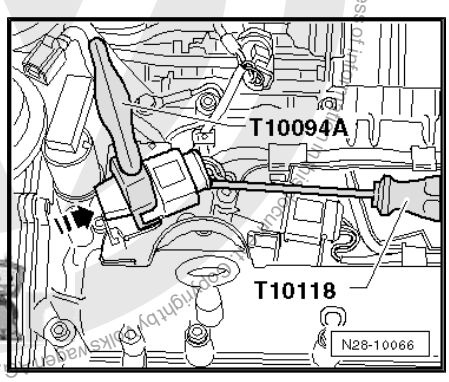

– Unscrew spark plug using spark plug wrench -3122 B- .
– Screw in new spark plugs using spark plug socket and extension -3122 B- .

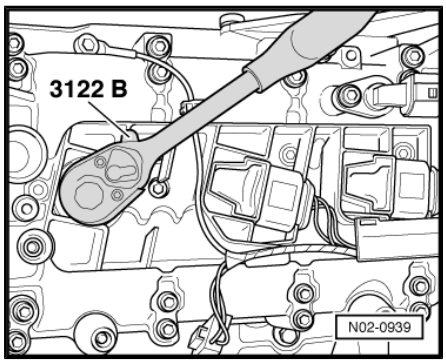

Note

- *Spark plug designation and specified torque: "Power unit" ⇒ Power unit; Rep. Gr. 28 ; Test data, spark plugs "Test data, spark plugs".*
- *Observe disposal regulations!*

Protected by copyright. Copying for private or commercial purposes, in part or in whole, is not permitted unless authorised by Volkswagen AG. Volkswagen AG does not guarantee or accept any liability with respect to the correctness of information in this document. Copyright by Volkswagen AG.

Downloaded from www.Manualslib.com manuals search engine

– Place puller -T10094 A- on ignition coil with output stage.
– Slide connector on ignition coil with output stage until it audibly engages.
– Push ignition coil with output stage -arrow- into cylinder head.
– Install engine cover ⇒ page 89 .

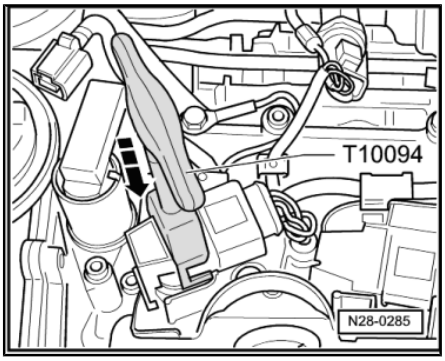

4.56.7 Renewing spark plugs: 1.4 l TSI engines

Removing:

– Remove engine cover ⇒ page 89 .

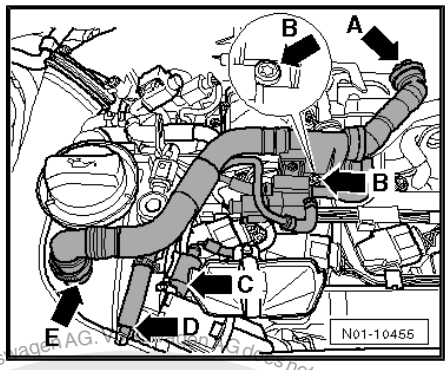

Note

To simplify removing and installing spark plugs, loosen some components and place them to side.

– Pull off connector -arrow C-.
– Pull off hose ends -arrow A- and -arrow E- (press together to release).
– Pull off hose -arrow D-.
– Remove bolt -arrow B-.

– Raise hose with bracket and charge pressure control solenoid valve -1- and place to side.
– Disengage clamps of cable guide -arrows-.

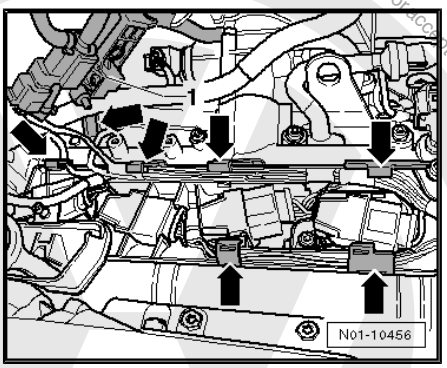

Note

- *When pulling out the ignition coils with output stages, the wires or ignition coil connectors can remain connected.*
- *Note installation position of ignition coils with output stages.*

Caution

Ensure that the cables are not kinked or damaged.

Protected by copyright. Copying for private or commercial purposes, in part or in whole, is not permitted unless authorised by Volkswagen AG. Volkswagen AG does not guarantee or accept any liability with respect to the correctness of information in this document. Copyright by Volkswagen AG.

Downloaded from www.Manualslib.com manuals search engine

– Seat puller -T10094 A- on ignition coil with output stage.
– Pull out ignition coil with output stage and connected wires and carefully place to side.

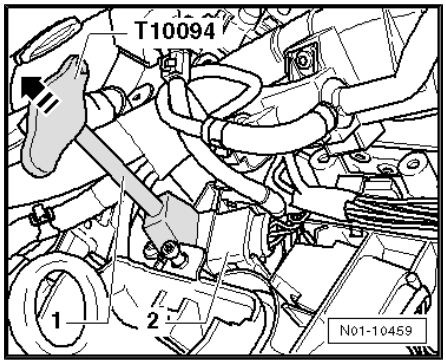

– Unscrew spark plugs using spark plug socket and extension -VAS 3122B- .

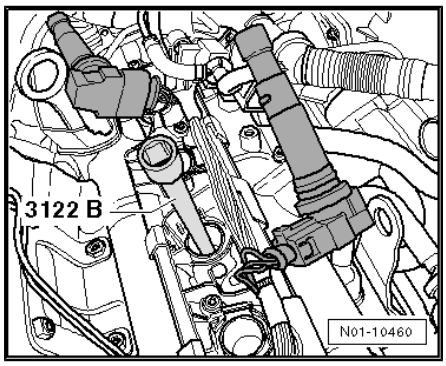

Installing:

– Screw in new spark plugs using spark plug socket and extension -VAS 3122B- .

Note

- *Spark plug designation and specified torque: "Power unit" ⇒ Power unit; Rep. Gr. 28 ; Test data, spark plugs "Test data, spark plugs".*
- *Observe disposal regulations!*

– Place puller -T10094 A- on ignition coil with output stage.
– Push ignition coil with output stage into cylinder head until they noticeably engage.
– Route cables properly in cable guide.
– Engage clamps of cable guide -arrows-.
– Set hose with bracket and charge pressure control solenoid valve -1- to original installation position.

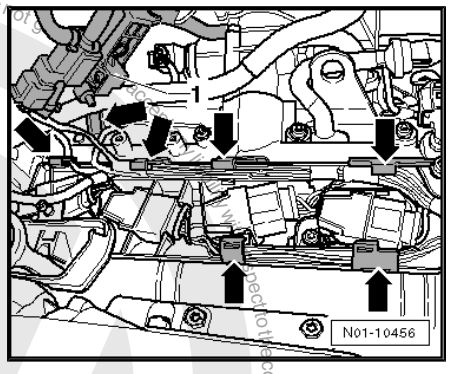

– Connect connector -arrow C-.
– Connect hose ends -arrow A- and -arrow E-.
– Fit hose -arrow D-.
– Tighten bolt -arrow B-.
– Install engine cover ⇒ page 89 .

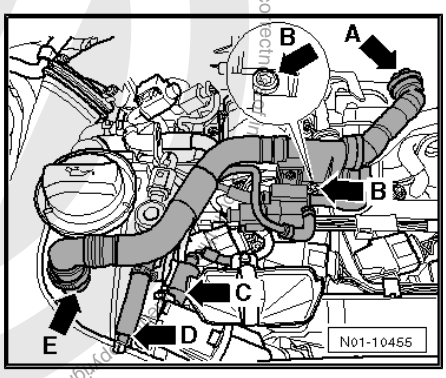

Protected by copyright. Copying for private or commercial purposes, in part or in whole, is not permitted unless authorised by Volkswagen AG. Volkswagen AG does not guarantee or accept any liability with respect to the correctness of information in this document. Copyright by Volkswagen AG.

Downloaded from www.Manualslib.com manuals search engine

4.56.8 Renewing spark plugs: 1.4 l TFSI engines

Removing:

– Remove engine cover ⇒ page 89 .

– Disengage clamps of cable guide -arrows-.

– Remove hoses -1- and -2-.

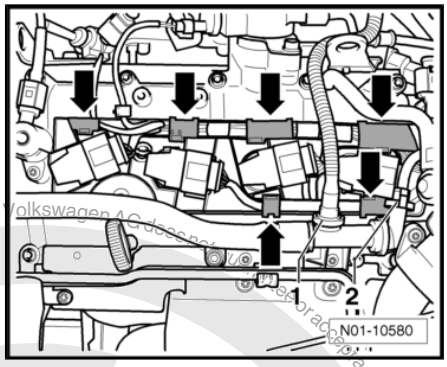

Note

- *When pulling out the ignition coils with output stages, the wires or ignition coil connectors can remain connected.*
- *Note installation position of ignition coils with output stages.*

Caution

Ensure that the cables are not kinked or damaged.

– Place Puller -T10094 A- on ignition coil with output stage -arrow-.

– Slightly pull out ignition coil with output stage.

– Fit assembly tool -T10118- as illustrated.

– Release connector locking device carefully and pull off connector.

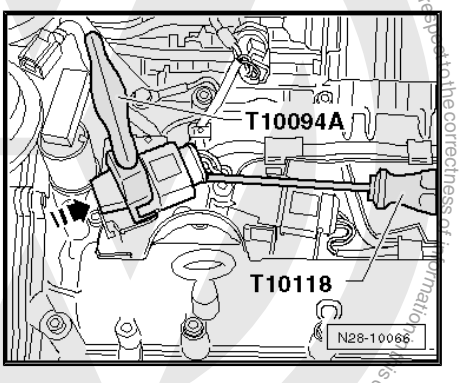

– Unscrew spark plugs using spark plug socket and extension -VAS 3122B- .

Installing:

– Install new spark plugs using spark plug socket and extension -VAS 3122B- .

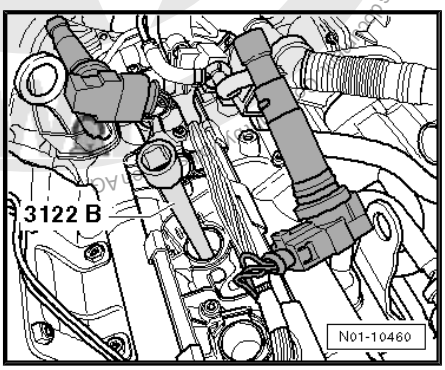

Note

- *Spark plug designation and specified torque: "Power unit" ⇒ Power unit; Rep. Gr. 28 ; Test data, spark plugs "Test data, spark plugs".*
- *Observe disposal regulations!*

– Seat puller -T10094 A- on ignition coil with output stage.

– Slide connector on ignition coil with output stage until it audibly engages.

Protected by copyright. Copying for private or commercial purposes, in part or in whole, is not permitted unless authorised by Volkswagen AG. Volkswagen AG does not guarantee or accept any liability with respect to the correctness of information in this document.

Downloaded from www.Manualslib.com manuals search engine

– Push ignition coil with output stage in direction of -arrow- into cylinder head.
– Route cables properly in cable guide.

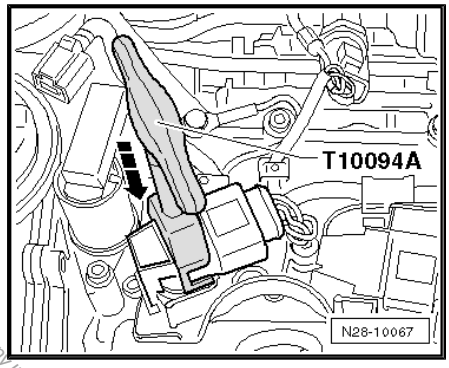

– Secure cable guide clips -arrows-.
– Connect hoses -1- and -2-.
– Install engine cover ⇒ page 89 .

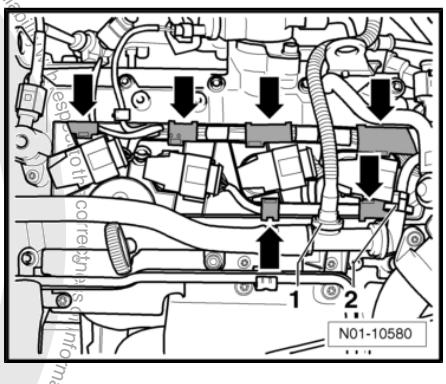

4.57 Front and rear final drive: Check oil level

Front bevel box

– "Power transmission" ⇒ Power transmission; Rep. Gr. 34 ; Checking gear oil level in bevel box "Checking gear oil level in bevel box"

Rear final drive

– "Power transmission; propshaft and rear final drive" ⇒ Power transmission; propshaft and rear final drive; Rep. Gr. 39 ; Checking gear oil level in rear final drive or replenish oil "Checking gear oil level in rear final drive or replenish oil"

Copyright by Volkswagen AG. Volkswagen AG does not guarantee or accept any liability with respect to the correctness of information in this document. Copyright by Volkswagen AG. Copying for private or commercial purposes, in part or in whole, is not permitted unless authorised by Volkswagen AG.

Downloaded from www.Manualslib.com manuals search engine

Protected by copyright. Copying for private, commercial purposes, in part or in whole, is not permitted unless authorised by Volkswagen AG. Volkswagen AG does not guarantee or accept any liability with respect to the correctness of information in this document. Copyright by Volkswagen AG.

5 Exhaust emissions test

In this chapter you will obtain information on the following subjects:

Exhaust emissions test for petrol engines ⇒ page 160

Exhaust emissions test for diesel engines without OBD ⇒ page 167

Exhaust emissions test for diesel engines with OBD ⇒ page 171

Note

- *Please observe the country specific legal regulations.*
- *The exhaust emissions test described below has been created according to the legal regulations valid in Germany.*

Emissions test intervals:

Vehicles with regulated catalytic converter or vehicles with diesel engine:

- 3 years after initial registration and then every 2 years.
- Vehicles for commercial passenger transport, e.g. taxis: every 12 months.

5.1 Exhaust emissions test for petrol engines

Note

- *The following description refers to vehicles fitted with "On-board diagnosis" - OBD with regulated catalytic converter.*
- *The OBD monitors all components and part systems influencing the exhaust emissions quality.*

Special tools and workshop equipment required

- Emissions testing station -VAS 6300-

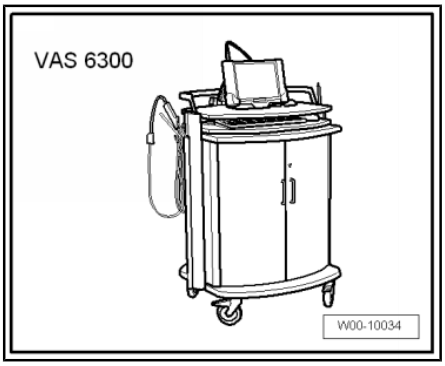

- OBD adapter cable -VAS 5052/16-

Downloaded from www.Manualslib.com manuals search engine

Note

- ♦ *It is only possible to carry out an exhaust emissions test when all units of the emissions testing station -VAS 6300- are connected properly and combined with each other according to operating instructions.*
- ♦ *All work to be performed is displayed by the emissions testing station -VAS 6300- .*

Test prerequisites:

- All test conditions and data required for exhaust emissions test are found on EET data sheet for the respective engine.
- For bar code reading the EET data sheet must be printed out.
- Automatic gearbox: Selector lever in position “P” or “N”.
- Manual gearbox: Gear lever in neutral
- Handbrake pulled on

– Perform exhaust emissions test according to instructions on display.

Initial screen:

– Select button -arrow- “Exhaust emissions test”.

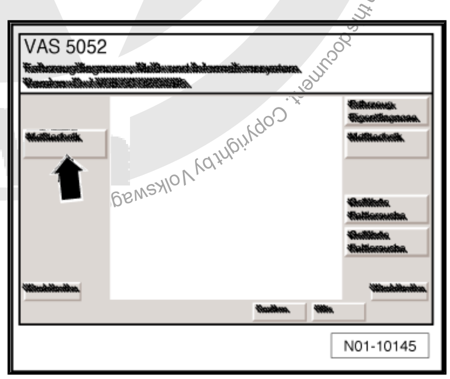

An overview is displayed to select the respective EET type.

– Select “EET petrol” -arrow-.

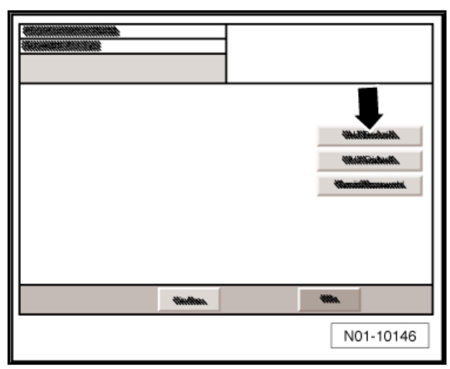

The display for warm-up phase appears.

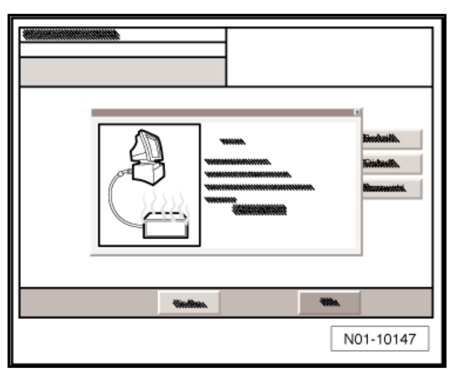

Protected by copyright. Copying for private or commercial purposes, in part or in whole, is not permitted unless authorised by Volkswagen AG. Volkswagen AG does not guarantee or accept any liability with respect to the correctness of information in this document. Copyright by Volkswagen AG.

Downloaded from www.Manualslib.com manuals search engine

– Continue exhaust emissions test according to instructions on display.

– If the EET specification selection is displayed, select respective “EET specification selection” -arrow-.

♦ If exhaust emissions test is performed initially, either select “Standard values”,

♦ Or “Last vehicle” when an exhaust emissions test is to be performed again.

– Select “Continue” on display see -item 1-.

Vehicle data input:

The vehicle data input menu is displayed.

Note

♦ *For new models the document previously known as the vehicle registration document is now called the vehicle registration certificate part 1.*

♦ *For new models the document previously known as the vehicle log book is now called the vehicle registration certificate part 2.*

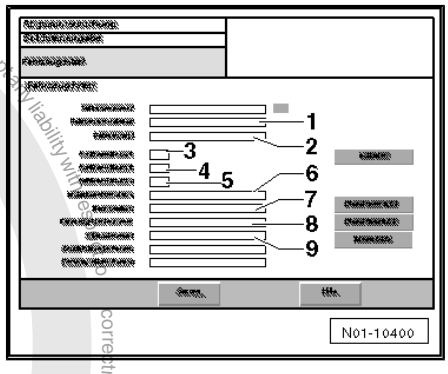

♦ -1- Vehicle manufacturer: “e.g. VOLKSWAGEN - VW”

♦ -2- Vehicle type: “e.g. Golf”

♦ -3- Key number to 1: “e.g. 11”

♦ -4- Key number to 2: “e.g. 0603” (vehicle registration document)

♦ -4- Key number to 2.1 (code to 2): “e.g. 0603” (vehicle registration certificate part 1)

♦ -5- Key number to 3: “e.g. 358” (vehicle registration document)

♦ -5- Key number to 2.2 (code to D2): “e.g. 358” (vehicle registration certificate part 1)

♦ -6- Engine code “e.g. AQY”

♦ -7- Registration number: “e.g. WOB-HH 1234”

♦ -8- Vehicle identification number: “e.g. WVWZZZ1JZYW123456”

– Enter odometer reading at -item 8- “e.g. 32000”.

Note

♦ *Further functions can be called up using "GoTo" button.*

♦ *The test can be interrupted using "GoTo" button.*

Copyright by Volkswagen AG. Volkswagen AG does not guarantee or accept any liability with respect to the correctness of information in this document. Copying for private or commercial purposes, in part or in whole, is not permitted unless authorised by Volkswagen AG.

Downloaded from www.Manualslib.com manuals search engine

– Select “with OBD”, -arrow-.

Specified data input for EET:

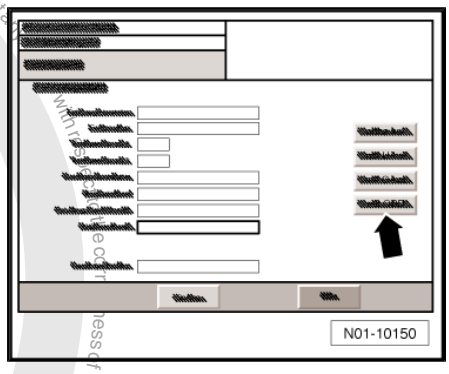

Note

- *If specifications are not available as bar code, they are to be entered manually.*
- *All test conditions and data required for exhaust emissions test, see ⇒ Data sheets for exhaust emission test for respective engine.*

Manual specified data input for EET:

– Perform manual data input according to instructions on display.

– Enter displayed values on EET data sheet in column “Test values for exhaust emissions test” on display as follows:

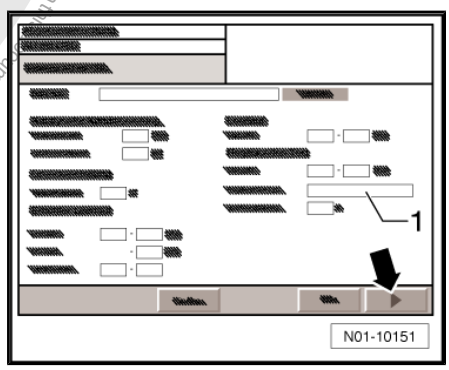

1 - Test speed (idling speed)

2 - Warm-up phase for catalytic converter

3 - Engine temperature

4 - Increased idling speed

5 - CO content at increased idling speed

6 - Lambda at increased idling speed

7 - Idling speed

8 - Select regulating probe type, either “Step-type probe” or “Broad-band probe” -item 1-.

9 - Lambda probe value

– When all data have been entered properly, press `Continue` button -arrow-.

Specified data input for EET as bar code:

– If specified data for EET are available as bar code, read bar code of EET data sheet with bar code reader.

All data required are shown on display.

– Press ☐ button -arrow- to continue procedure.

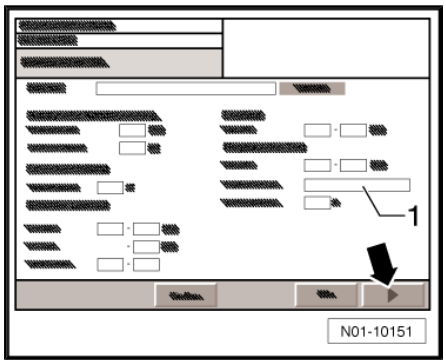

Copyright by Volkswagen AG. Volkswagen AG does not guarantee or accept any liability with respect to the correctness of information in this document. Copying for private or commercial purposes, in part or in whole, is not permitted unless authorised by Volkswagen AG.

Downloaded from www.Manualslib.com manuals search engine

Visual check:

- Follow instructions on display.
- Perform visual check.
- If visual check is OK press “OK” button. -arrow-.

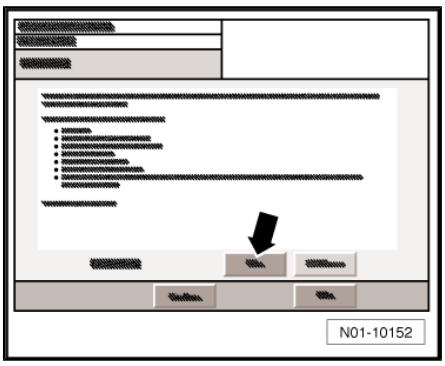

Note

When "not OK" button is pressed a check will be carried out

The visual check is displayed with the request to connect the diagnostic connector -arrow A- and to check the MI lamp -arrow B-.

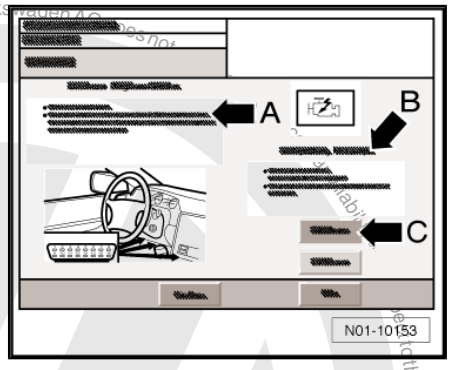

- Follow instructions on display.
- Switch off ignition.
- Connect diagnostic cable connector to EOBD connection.

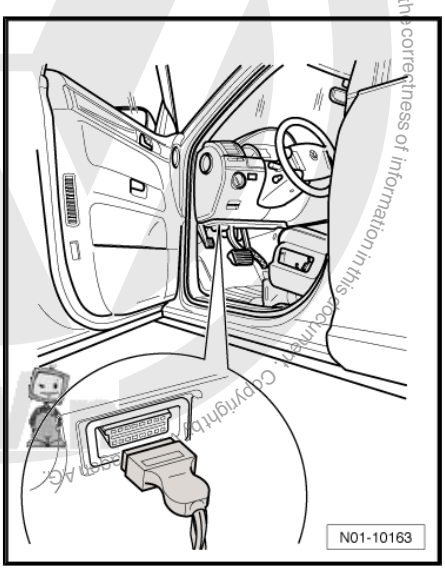

- Switch on ignition.
- Perform visual check of “MI lamp”.
- If lamp lights up, press button “Lamp On” -arrow C-.

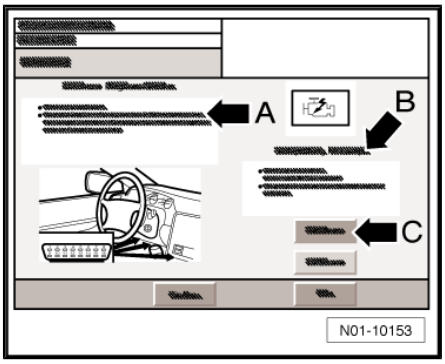

Protected by copyright. Copying for private or commercial purposes, in part or in whole, is not permitted unless authorised by Volkswagen AG. Volkswagen AG does not guarantee or accept any liability with respect to the correctness of information in this document.

Downloaded from www.Manualslib.com manuals search engine

– Follow instructions on display, see -arrow C- and -arrow A-.

♦ Start engine.

♦ Perform visual check of MI lamp.

– Insert emission probe in exhaust tail pipe.

Note

The exhaust emissions test is only continued when the test probe is in the exhaust tail pipe.

It is automatically switched to test for readiness of operation.

It is checked here if all tests for readiness of operation supported by the control unit have been performed.

Note

♦ *If all display values are set to zero, a regulating probe test is not performed.*

♦ *If not all display values are set to zero, a regulating probe test will be performed later.*

– Confirm condition of "MI lamp" - arrow B-.

Catalytic converter conditioning:

It is automatically switched to warm-up phase of catalytic converter.

– Follow instructions on display.

Measurement starts when the engine speed has reached the required level.

– Maintain engine speed in required engine speed range.

The remaining time to perform the warm-up phase is displayed - arrow A -.

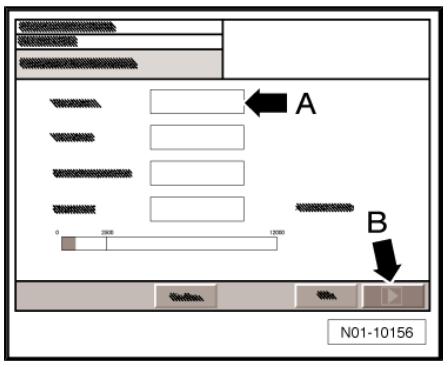

Warm-up phase:

It is automatically switched to display for measuring engine temperature.

– Follow instructions on display.

Note

This is only indicated on display if engine temperature has not reached 80 °C.

– Bring engine to required temperature.

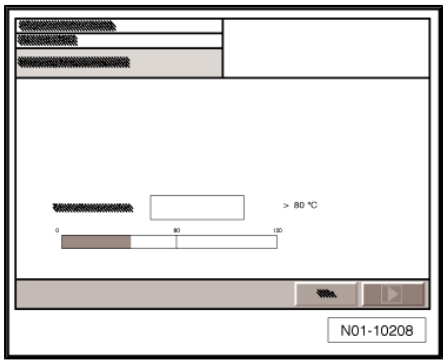

Protected by copyright. Copying for private or commercial purposes, in part or in whole, is not permitted unless authorised by Volkswagen AG. Volkswagen AG does not guarantee or accept any liability with respect to the correctness of information in this document. Copyright by Volkswagen AG.

Downloaded from www.Manualslib.com manuals search engine

Measurement at increased idling speed:

It is automatically switched to display for measuring increased idling speed.

– Follow instructions on display.

Measurement starts when the engine speed has reached the required level.

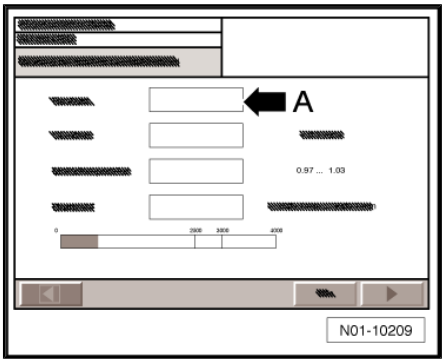

Note

- *Measurement can be skipped using button, i.e. the exhaust emissions test has failed.*
- *Measured values are reset using button and the test can be repeated.*

– Maintain engine speed in required engine speed range.

The remaining time to perform measurement is displayed -arrow A-.

Measuring idling speed and CO content:

It is automatically switched to display for measuring the idling speed and CO content.

Measurement starts when the engine speed has reached the required level.

The remaining time to perform measurement is displayed -arrow A-.

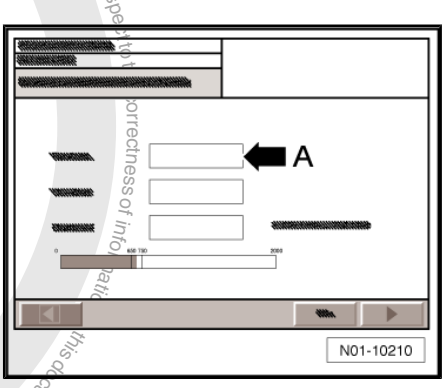

Regulating probe test:

Note

The regulating probe test is only performed, when "NOT" all display values are set to zero at the test for readiness of operation.

It is automatically switched to display for regulating probe test.

Note

The regulating probe test is performed for every lambda probe individually.

Measurement starts when the engine speed has reached the required level.

– Maintain engine speed in required engine speed range.

The remaining time to perform measurement is displayed -arrow A-.

Protected by copyright. Copyright by Volkswagen AG. Volkswagen AG does not guarantee or accept any liability with respect to the correctness of information in this document. Copying for private or commercial purposes, in part or in whole, is not permitted unless authorised by Volkswagen AG.

Downloaded from www.Manualslib.com manuals search engine

Evaluation:

When the exhaust emissions test has been performed, the log is shown on display.

The test result is displayed.

Now remarks concerning the exhaust emissions test can be entered -arrow A-. They will then be included in the test log.

– When the exhaust emissions test is classed as passed, select -arrow B- “EET sticker issued” in drop-down menu and date.

– Then confirm with “Yes”, see -arrow C-.

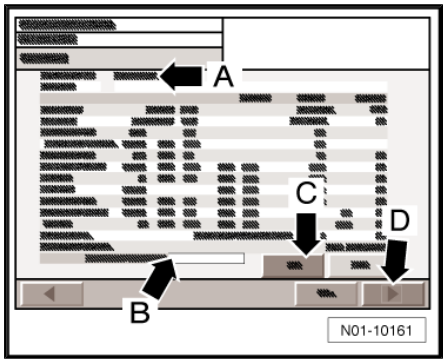

After confirming, the two “TEST CERTIFICATES” are printed out automatically.

– If a further test certificate is required, press -arrow A- “Print” button.

– Follow instructions on display.

– Take emission probe out of exhaust tail pipe.

– Then press button -arrow B-

The exhaust emissions test is completed and a new exhaust emissions test can be performed.

5.2 Exhaust emissions test for diesel engines without OBD

Special tools and workshop equipment required

♦ Diesel tester -V.A.G 1743-

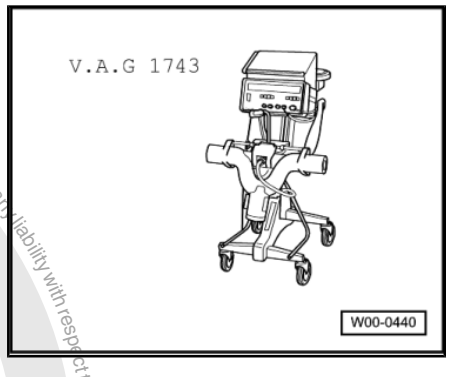

♦ Engine speed adapter -VAS 5087-

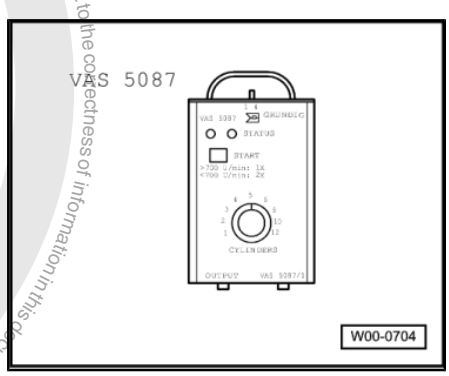

Protected by copyright. Copying for private or commercial purposes, in part or in whole, is not permitted unless authorised by Volkswagen AG. Volkswagen AG does not guarantee or accept any liability with respect to the correctness of information in this document. Copyright by Volkswagen AG.

Downloaded from www.Manualslib.com manuals search engine

- Adapter cable -VAS 5087/3-

Note

- *All test conditions and data required for exhaust emissions test: ⇒ Data sheets for exhaust emission test*
- *If possible, the test should be completed outdoors following a road test. If this is not possible for various reasons (weather, excessive noise in residential areas), then the test can be carried out in a workshop.*
- *To reduce noise levels, the bonnet should be closed on first catch during tests.*

Performing visual check of components influencing emissions

⇒ Data sheets for exhaust emission test

– Perform visual check for:

- Installation
- Completeness
- Leakage
- Damage

Note

Faults found are to be rectified.

With ignition switched off, connect testers as follows:

– Pull on handbrake.

– Manual gearbox: Gear lever in neutral.

– Automatic gearbox: Selector lever in position “P” or “N”.

– Connect diesel tester -V.A.G 1743- according to operating instructions with ignition switched off.

Connect engine speed adapter -VAS 5087- as follows:

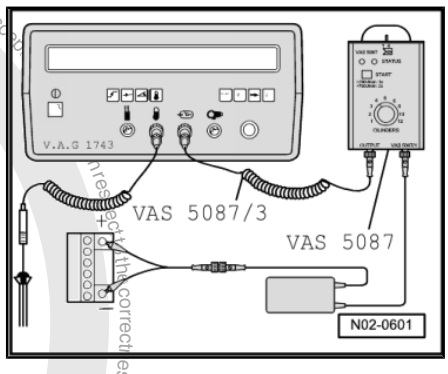

Note

- *Observe operating instructions for engine speed adapter -VAS 5087- !*
- *Strictly follow the safety precautions in the operating instructions!*

Protected by copyright. Copying for private or commercial purposes, in part or in whole, is not permitted unless authorised by Volkswagen AG. Volkswagen AG does not guarantee or accept any liability with respect to the correctness of information in this document. Copyright by Volkswagen AG.

Downloaded from www.Manualslib.com manuals search engine

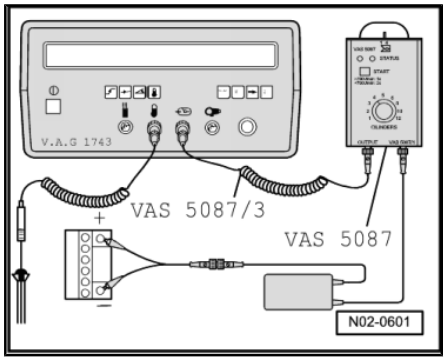

– Using adapter cable -VAS 5087/3- , connect “Output” of engine speed adapter -VAS 5087- to pick-up clamp input of diesel tester -V.A.G 1743- .
– Turn switch for number of cylinders to respective number of cylinders.
– Connect a wire from adapter -VAS 5087/1- to -VAS 5087- (socket -VAS 5087/1-).
– Using the other wires from adapter -VAS 5087/1- make a connection to the vehicle battery, by connecting:

♦ Red clamp on positive
♦ Black clamp on negative.

– Start engine and run at idling speed.
– Press the Start button on engine speed adapter -VAS 5087- . The red signal lamp must flash for about 10 seconds. Then the green signal lamp must light up.

The engine speed must now be displayed on diesel tester -V.A.G 1743- .

If the engine speed is displayed incorrectly or not at all: see “Operating instructions for VAS 5087”.

Perform exhaust emissions test according to instructions on diesel tester -V.A.G 1743- display.

If the following is indicated on display:

```
n rpm        mode    k 1/m          T °C
 XXX XXXX    B   X.XX              XX
```

Unit ready to carry out measurements.

Checking idling speed:

Idling speed not within specified range:

Note

The idling speed and maximum speed can be checked but not adjusted.

– If the values are not within specified range, a repair measure must be made.

Perform acceleration test:

– Press button for “Acceleration test”.

First, a fresh air comparison is performed.

If the following is indicated on display:

```
n rpm         tB s k 1/m  Gas T °C      M
 XXX XXXX -.-   X.XX      0     XX      -
```

Current values for temperature and speed are displayed.

The arrow pointing upwards indicates that the unit is waiting for the throttle burst.

– Depress accelerator pedal fully and hold for specified time.
– Check maximum engine speed (not adjustable).

Protected by copyright. Copying for private or commercial purposes, in part or in whole, is not permitted unless authorised by Volkswagen AG. Volkswagen AG does not guarantee or accept any liability with respect to the correctness of information in this document. Copyright by Volkswagen AG.

Downloaded from www.Manualslib.com manuals search engine

Protected copyright. Copyright by Volkswagen AG. Volkswagen AG does not guarantee or accept any liability with respect to the correctness of information in this document. Copyright by Volkswagen AG. Copying for private or commercial purposes, in part or in whole, is not permitted unless authorised by Volkswagen AG.

WARNING

If the governed speed (maximum speed) is exceeded, lift off accelerator pedal immediately and perform repair measures.

– If the values are not within specified range, a repair measure must be made.

If the unit detects a valid throttle burst (the speed increases continually during measuring period tx), the following is indicated on display:

If the following is indicated on display:

```
n rpm        tB s  k 1/m  Gas T °C    M
 XXX XXXX -.-   -.-     1     XX      -
```

The display remains “frozen” during the evaluation phase (approx. 15 seconds).

After the evaluation phase, the display changes to:

```
n rpm        tB s  k 1/m  Gas T °C    M
 XXX XXXX  X.XX   X.XX     1     XX   -
```

The arrow pointing upwards indicates that the unit is waiting for the next throttle burst.

Repeat test 4 times.

The following is indicated on display after each throttle burst:

```
n rpm        tB s  k 1/m  Gas T °C    M
 XXX XXXX X.XX   X.XX     X     XX   -
```

In this way, the unit measures and registers at least four throttle bursts. After the fourth and for each further throttle burst sequence, an average of the last three measurements is performed.

The following is indicated on display after each throttle burst:

```
n rpm        tB s  k 1/m  Gas T °C    M
 XXX XXXX X.XX   X.XX     X     XX   -
```

After 10 seconds, this display changes to:

```
             tB s  k 1/m  Band width   M
Average      X.XX   X.XX    X.XX      -
```

After 5 seconds, this display changes to:

```
             tB s  k 1/m  Band width   M
Average      X.XX   X.XX      XX      -
```

The display remains until a further throttle burst is performed or another measurement is called up.

If the opacity figures are equal to or less than the prescribed figures, cease measurements.

But if the determined opacity figures are over the prescribed figures, locate fault during a repair measure

Downloaded from www.Manualslib.com manuals search engine

5.3 Exhaust emissions test for diesel engines with OBD

Caution

- *Observe "SAFETY AND DAMAGE AVOIDANCE PRECAUTIONS" in the operating instructions for VAS 6300.*

Note

- *The following description refers to vehicles fitted with "On-board diagnosis" OBD.*
- *The OBD monitors all components and part systems influencing the exhaust emissions quality.*

Special tools and workshop equipment required

- Emissions testing station -VAS 6300-

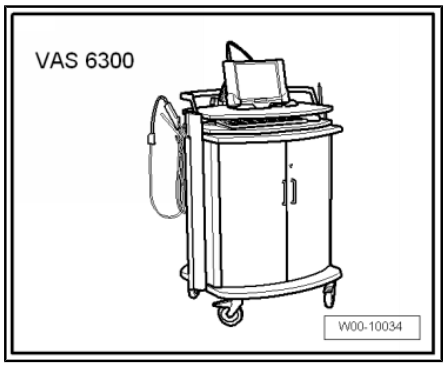

- OBD adapter cable -VAS 5052/16-

Note

- *It is only possible to carry out an exhaust emissions test when all units of the emissions testing station -VAS 6300- are connected properly and combined with each other according to operating instructions.*
- *All work to be performed is displayed by the emissions testing station -VAS 6300- .*

Test prerequisites:

- All test conditions and data required for exhaust emissions test are found on EET data sheet for the respective engine.
- For bar code reading of specified data for EET, the EET data sheet must be printed out.
- Automatic gearbox: Selector lever in position "P" or "N".
- Manual gearbox: Gear lever in neutral
- Handbrake pulled on

– Perform exhaust emissions test according to instructions on display.

Protected by copyright. Copying for private or commercial purposes, in part or in whole, is not permitted unless authorised by Volkswagen AG. Volkswagen AG does not guarantee or accept any liability with respect to the correctness of information in this document. Copyright by Volkswagen AG.

Downloaded from www.Manualslib.com manuals search engine

Initial screen:

– Select button “Exhaust emissions test”, -arrow-.

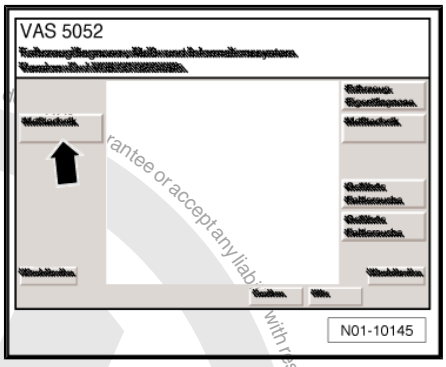

An overview is displayed to select the respective EET type.

– Select “EET diesel* -arrow-.

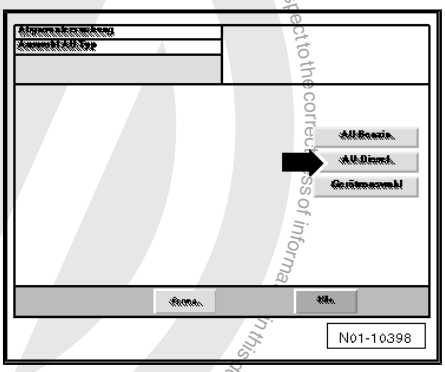

The display for warm-up phase appears.

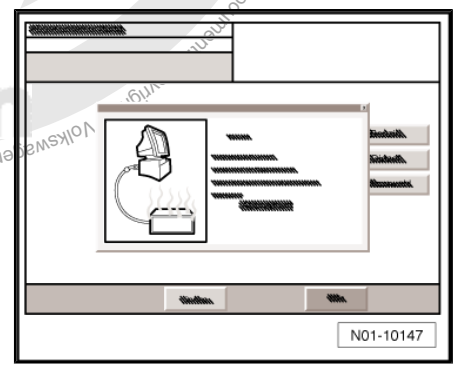

Protected by copyright. Copying for private or commercial purposes, in part or in whole, is not permitted unless authorised by Volkswagen AG. Volkswagen AG guarantee or accept any liability with respect to the correctness of information in this document. Volkswagen AG.

Downloaded from www.Manualslib.com manuals search engine

– Continue exhaust emissions test according to instructions on display.

– If the EET specification selection is displayed, select respective “EET specification selection” -arrow-.

♦ If exhaust emissions test is performed initially, select “Standard values”,

♦ Or “Last vehicle” when an exhaust emissions test is to be carried out again.

– Select “Continue” -item 1- on display.

Vehicle data input:

The vehicle data input menu is displayed.

Note

♦ *For new models the document previously known as the vehicle registration document is now called the vehicle registration certificate part 1.*

♦ *For new models the document previously known as the vehicle log book is now called the vehicle registration certificate part 2.*

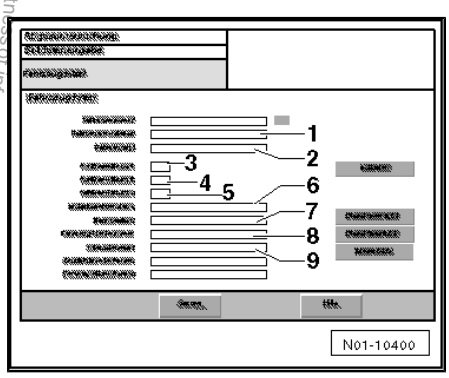

♦ -1- Vehicle manufacturer: “e.g. VOLKSWAGEN - VW”

♦ -2- Vehicle type: “e.g. Golf”

♦ -3- Key number to 1: “e.g. 11”

♦ -4- Key number to 2: “e.g. 0603” (vehicle registration document)

♦ -4- Key number to 2.1 (code to 2): “e.g. 0603” (vehicle registration certificate part 1)

♦ -5- Key number to 3: “e.g. 358” (vehicle registration document)

♦ -5- Key number to 2.2 (code to D2): “e.g. 358” (vehicle registration certificate part 1)

♦ -6- Engine code “e.g. AQY”

♦ -7- Registration number: “e.g. WOB-HH 1234”

♦ -8- Vehicle identification number: “e.g. WVWZZZ1JZYW123456”

– Enter odometer reading at -item 9- “e.g. 32000”.

Note

♦ *Further functions can be called up using* GoTo *button.*

♦ *The test can be interrupted using* GoTo *button.*

Volkswagen AG. Volkswagen AG does not guarantee or accept any liability with respect to the correctness of information in this document. Copyright by Volkswagen AG.

Downloaded from www.Manualslib.com manuals search engine

– Select “Diesel OBD” -arrow-.

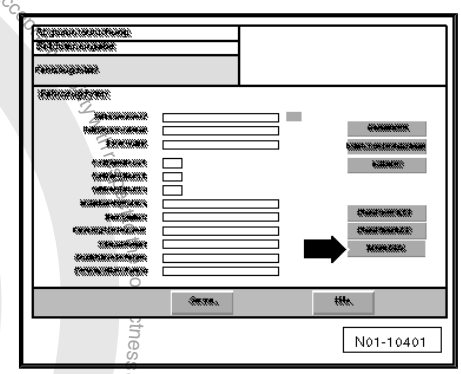

Specified data input for EET:

There are different ways to enter the specified data:

- 1. Manual input
- 2. Bar code input of EET data sheet
- 3. ELSA web service

Note

- *To use the ELSA web service, the vehicle diagnostic tester , which is used for the exhaust emissions test, must be integrated in the workshop network.*
- *For the ELSA web service the vehicle specified data are automatically transmitted via the network to the respective mask.*

Manual specified data input for EET:

Note

All test conditions and data required for exhaust emissions test, see ⇒ Data sheets for exhaust emission test for respective engine.

– Perform manual data input according to instructions on display.

– Enter displayed values on EET data sheet in column “Test values for exhaust emissions test” on display as follows:

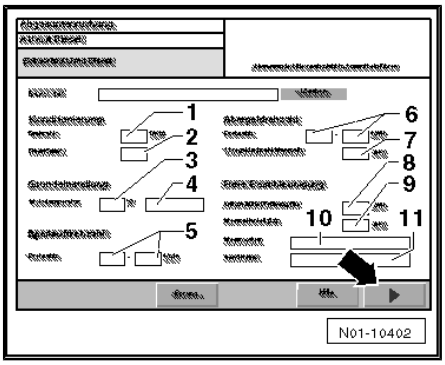

1 - Speed for conditioning

2 - Number of throttle bursts for conditioning

3 - Engine oil temperature (min. value)

4 - Select engine oil temperature measurement procedure

5 - Idling speed

6 - Rev limit

7 - Rev limit measuring period (1 second)

8 - Opacity figure (average)

9 - Select probe type (No. of probe)

10 - Select measuring mode

11 - Measured period portion

– When all data have been entered properly, press ⏎ button -arrow-.

Specified data input for EET as bar code:

– If specified data for EET are available as bar code, read bar code of EET data sheet with bar code reader.

Downloaded from www.Manualslib.com manuals search engine

All data required are shown on display -1-.

– Press button -arrow- to continue procedure.

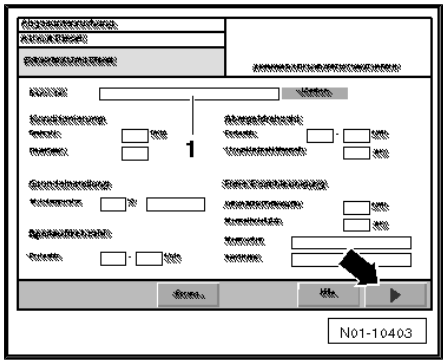

Visual check:

– Follow instructions on display.

– Perform visual check.

– If visual check is OK press “OK” button. -arrow-.

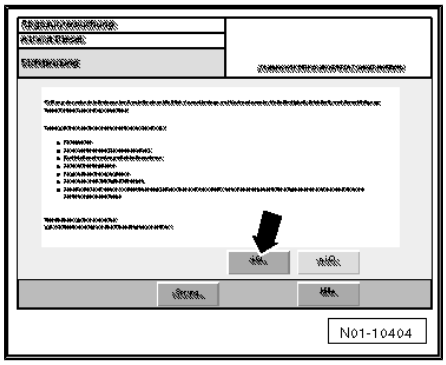

Note

When "not OK" button is pressed, a check will be carried out.

Connecting diagnostic connector:

• Ignition is switched off.

The visual check is displayed with the prompt to connect the diagnostic connector -arrow A- and to check the “MI lamp” -arrow B-.

– Follow instructions on display.

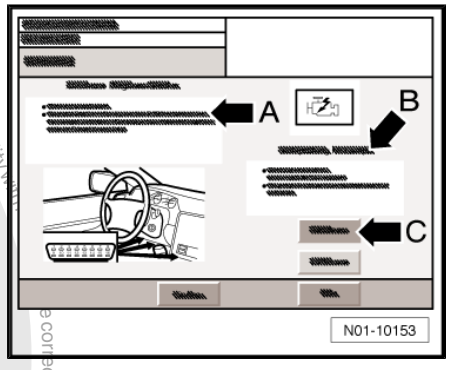

– Connect diagnostic cable connector to EOBD connection.

Visual check of MI lamp with ignition switched off:

– Switch on ignition.

– Perform visual check of “MI lamp”.

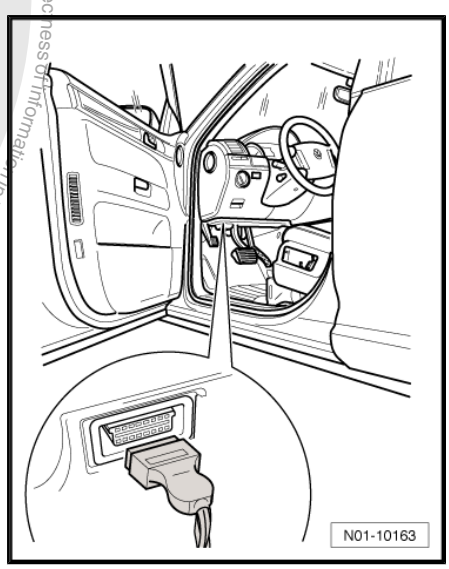

Protected by copyright. Copying for private or commercial purposes, in part or in whole, is not permitted unless authorised by Volkswagen AG. Volkswagen AG does not guarantee or accept any liability with respect to the correctness of information in this document. Copyright by Volkswagen AG.

Downloaded from www.Manualslib.com manuals search engine

– If lamp lights up, press button “Lamp On” -arrow C-.

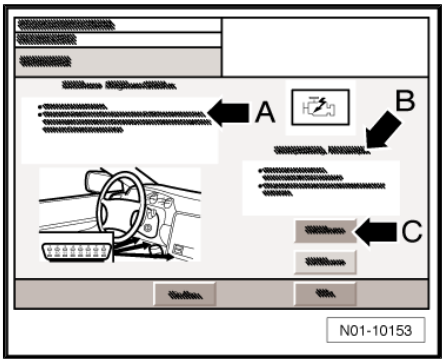

Note

If the MI lamp does not light up during visual check, the result of the exhaust emissions test is “Failed”.

Visual check of MI lamp with engine running:

– Start engine and confirm engine running on display with “Yes”.

– Perform visual check of “MI lamp”. The lamp must not light or flash.

– Confirm condition of “MI lamp” -arrow-.

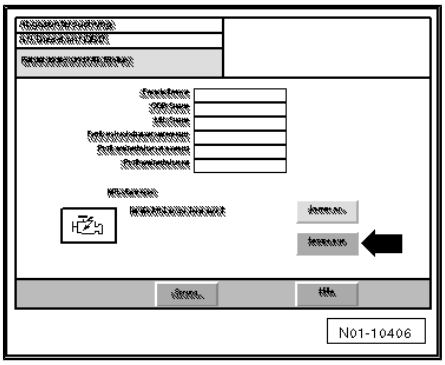

It is automatically switched to test for readiness of operation.

It is checked here if all tests for readiness of operation supported by the control unit have been performed.

Conditioning:

In the conditioning phase the engine and, if necessary, the emission control systems are brought to operating temperature by throttle bursts and are prepared for the exhaust emissions test.

– Follow instructions on display.

– Maintain engine speed in required engine speed range.

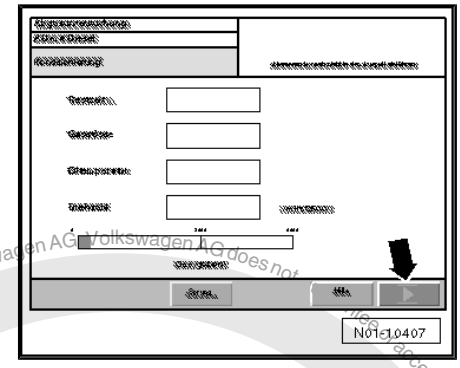

If no conditioning is necessary, press ⇥ button -arrow- for the next measurement.

Reading engine temperature:

The engine temperature is read via the diagnostic connector of engine control unit.

When the required engine temperature is reached, it is automatically switched to display for measuring the idling speed.

Measuring idling speed:

– Follow instructions on display.

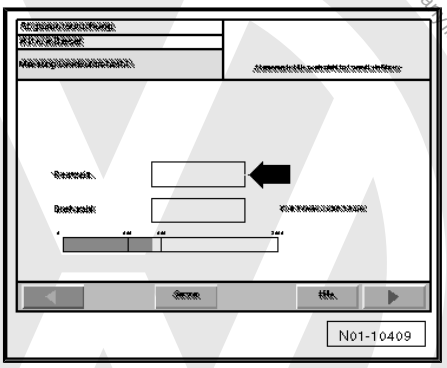

Measurement starts when the engine speed has reached the required level.

Note

- *Do not insert emission probe into exhaust tail pipe.*
- *Measurement can be skipped using ⇥ button, i.e. the exhaust emissions test has failed.*
- *Measured values are reset using ⇦ button and the test can be repeated.*

– Maintain engine speed in required engine speed range.

The remaining time to perform measurement is displayed -arrow-.

Measuring rev limit:

Protected by copyright. Copying for private or commercial purposes, in part or in whole, is not permitted unless authorised by Volkswagen AG. Volkswagen AG does not guarantee or accept any liability with respect to the correctness of information in this document. Copyright by Volkswagen AG.

Downloaded from www.Manualslib.com manuals search engine

Protected by copyright. Copyright of this document is vested in Volkswagen AG. Volkswagen AG does not guarantee or accept any liability with respect to the correctness of information in this document. Copyright by Volkswagen AG.

It is automatically switched to display for measuring rev limit.

Measurement starts when the engine speed has reached the required level.

– Operate throttle until the measurement is carried out. To do this, immediately depress accelerator pedal.

The remaining time to perform measurement is displayed -arrow-.

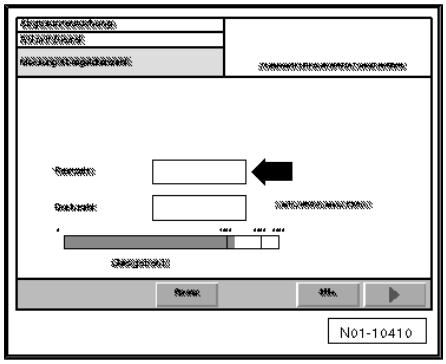

Note

- *Do not insert emission probe into exhaust tail pipe.*
- *Measurement can be skipped using → button, i.e. the exhaust emissions test has failed.*

Air quality check:

An air quality check is carried out before starting the free acceleration. When doing this, no emission probe must be in the exhaust tail pipe. Otherwise measuring errors or faulty signals could occur during further measurements.

– When the air quality check is carried out, insert emission probe into exhaust tail pipe

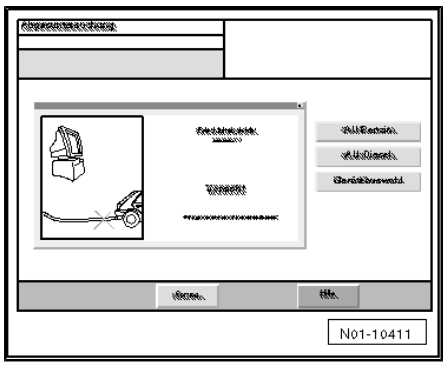

Free acceleration:

It is automatically switched to display for “Free acceleration”.

During “Free acceleration” the engine is revved up to rev limit without load as quickly as possible.

The “Free acceleration” test consists of at least four throttle bursts.

Free acceleration - phase 1:

– Follow instructions on display -arrow A- and -arrow C-.

– Maintain idling speed in engine speed range indicated -arrow D-.

The remaining time to perform measurement is displayed -arrow B-.

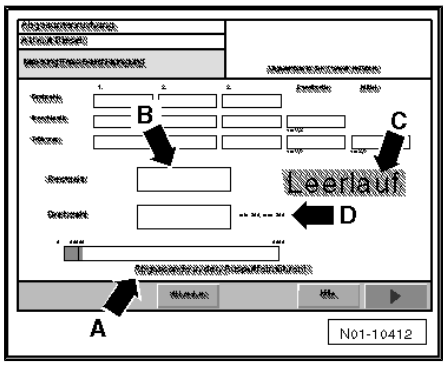

Note

- *The emissions probe must be in the exhaust tail pipe.*
- *If the speed deviates from engine speed range indicated, the measurement starts again.*
- *Measurement can be skipped using → button, i.e. the exhaust emissions test has failed.*

Free acceleration - phase 2:

Downloaded from www.Manualslib.com manuals search engine

– Follow instructions on display -arrow B-.

– Depress accelerator pedal fully when prompted and hold until the prompt for idling is shown on display.

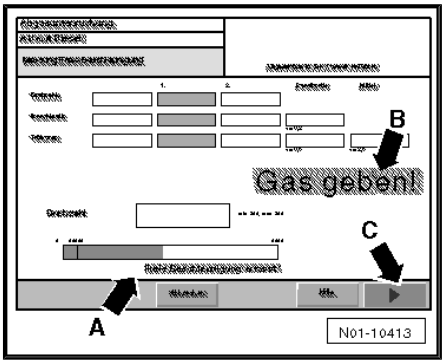

Free acceleration - phase 3:

– Remove foot from accelerator pedal when the prompt for idling is shown on display -arrow B- and run engine at idling speed.

The test results and information on the latest “Free acceleration” are shown on display -arrow A-. If the measured values are not OK, here you can obtain information why the “Free acceleration” has failed.

Note

- *If the field is coloured white the measured value is within tolerance.*
- *If the field is coloured red the measured value is outside tolerance.*
- *If the field is coloured yellow the measured value is outside tolerance, but can be assessed by the operator.*

Further throttle bursts:

– Follow instructions on display -arrow B-.

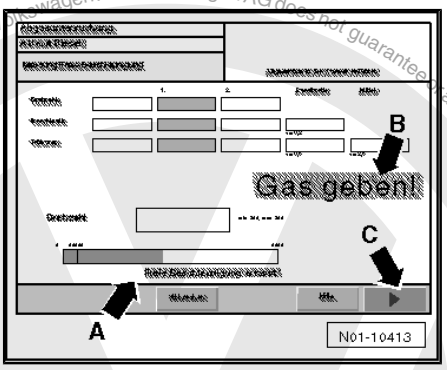

Now the next throttle burst follows, starting with phase 1 of “Free acceleration”.

Many “Free accelerations” can be carried out until:

- Three “Free accelerations” have been completed in succession and the range of acceleration is OK.
- All values are OK, with the exception of range of acceleration, and the test is continued by pressing the ↵ button -arrow C-. (In this case, the operator assesses if the value is OK.)
- The values are not OK and the measurement is skipped by pressing the ↵ button -arrow C-.

If the measured values are OK after three throttle bursts in succession, i.e. all fields are coloured white, the exhaust emissions test is completed.

Evaluation:

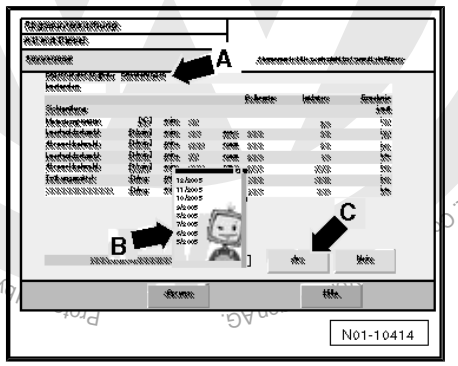

When the exhaust emissions test has been performed, the log is shown on display.

The test result is displayed.

Now remarks concerning the exhaust emissions test can be entered -arrow A-. They will then be included in the test log.

– When the exhaust emissions test is classed as passed, select -arrow B- EET sticker issued in drop-down menu and date.

– Then confirm with “Yes” -arrow C-.

The exhaust emissions test log is shown on display and can be printed out as often as required in the menu “Print preview” using “Print” button -arrow A-.

Volkswagen AG. Volkswagen AG does not guarantee or accept any liability with respect to the correctness of information in this document. Copyright by Volkswagen AG. Not permitted unless authorised by Volkswagen AG. Private or commercial purposes in part or in whole are not permitted unless authorised by Volkswagen AG.

Downloaded from www.Manualslib.com manuals search engine

– Press button “Close” -arrow B- to close the menu “Print preview ”.

– Follow instructions on display.

– Take emission probe out of exhaust tail pipe.

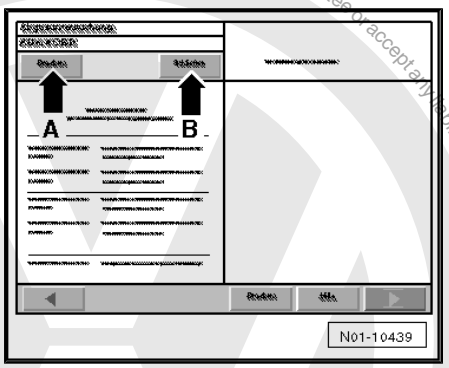

– Then press button -arrow B-.

The exhaust emissions test is completed, a new exhaust emissions test can be performed.

Protected by copyright. Copying for private or commercial purposes, in part or in whole, is not permitted unless authorised by Volkswagen AG. Volkswagen AG does not guarantee or accept any liability with respect to the correctness of information in this document. Copyright by Volkswagen AG.

Downloaded from www.Manualslib.com manuals search engine

6 Glossary

These explanations only apply to “Maintenance Manual”. They are not necessarily generally valid!

Term	Explanation
ABS	Anti-lock brake system: the ABS is a regulating system in the brake system, that prevents locking when braking. This helps to maintain directional stability and steerability.
ATF	Automatic transmission fluid: gear oil for automatic gearboxes.
ATF level	Filling level of ATF in gearbox
CO	Carbon monoxide is produced when fuels containing carbon are not combusted completely.
CN	Cetane number: measurement unit for ignition quality of diesel fuel
DIN	Deutsches Institut für Normung e.V (German institute for standardization)
E85	Liquid ethanol fuel for use of adapted petrol engines (ratio: 85 % ethanol to 15 % petrol)
Part No.	Abbreviation for part number
EN	European standard
EOBD	European onboard diagnosis
FAME	Fatty acid methyl ester
FSI	Fuel Stratified Injection: fuel stratified injection
TFSI	Turbo fuel stratified injection
TSI	From model year 2008 the designation TFSI is replaced by TSI. Therefore the designation TSI is given to TSI turbocharger and TSI twincharger.
	TSI turbocharger: charging only with turbocharger
	TSI twincharger: charging with turbocharger and compressor
MIL	Malfunction Indicator Light: American designation for exhaust emissions warning lamp K83
NAR	North American Region
OBD	Onboard diagnosis: the OBD monitors all components influencing the exhaust emissions quality
OBD-II	American onboard diagnosis
PD	Unit injector: injector for diesel engines
PR No.	Abbreviation for production control number. It identifies among other things optional equipment or country-specific deviations
PM	Particulate matter: soot particulate value for diesel engine emissions
QG0	Vehicles “not” factory-fitted with components for LongLife service. For maintenance the time and distance dependent intervals (non-flexible intervals) are valid.
QG1	Vehicles are factory-fitted with active LongLife service. This means, vehicles have a flexible service interval display and are fitted with the following components: ♦ Flexible service interval display in dash panel insert ♦ Engine oil level sensor ♦ Brake pad wear indicator
QG2	The LongLife service is not factory-activated. This means, vehicles have a non-flexible service interval display (time and distance dependent service intervals) and are fitted with the following components: ♦ Non-flexible service interval display in dash panel insert ♦ Engine oil level sensor ♦ Brake pad wear indicator
Readiness code	8-digit binary code which indicates if all exhaust relevant diagnoses have been performed by the engine management.
RON	Research octane number: measurement unit of the knock resistance of petrol

Downloaded from www.Manualslib.com manuals search engine

Term	Explanation
SAE	Society of automotive engineers: association which creates proposals and guidelines for implementing legal requirements (e.g. standards)
SD	Naturally aspirated diesel engine
SDI	Naturally aspirated diesel engine - direct injection
TDI	Turbo diesel engine - direct injection
DP	Distributor injection pump
ULEV	Ultra-low emission vehicle
ESI	Extended servicing intervals
Common rail	English term, refers to a common high-pressure injection line (rail), which supplies all cylinders of the relevant cylinder bank with fuel.
Diesel particulate filter	The diesel particulate filter is installed behind the catalytic converter and filters soot particles from emissions.
LongLife service	The long-life service enables extremely long inspection or oil change intervals, depending on individual driving style and conditions under which the vehicle is used. For the LongLife service a special engine oil is required.
Step-type probe	It is also called finger probe, LPH (lambda probe heating), FLP (flat lambda probe) or planar lambda probe. The voltage of the output signal of the lambda probe jumps rapidly. The lambda probe value is determined by a change in voltage. The probe is used as after catalytic converter probe.
Broad-band probe	Also called ULP (universal lambda probe). The voltage of the lambda probe output nearly increases linear. The lambda probe value is determined by a change in voltage. This enables to measure the lambda probe value via a larger measuring range (broad band). The probe is used as before catalytic converter probe.
RDK, RKA	Tyre pressure monitoring, tyre monitor display

Protected by copyright. Copying for private or commercial purposes, in part or in whole, is not permitted unless authorised by Volkswagen AG. Volkswagen AG does not guarantee or accept any liability with respect to the correctness of information in this document. Copyright by Volkswagen AG.

Downloaded from www.Manualslib.com manuals search engine